US Army Corps of Engineers®

JAPAN DISTRICT DESIGN GUIDE

APPENDIX

FEBRUARY 2020

Version 4.0 Approved for Public Release, Distribution Unlimited.

This page is intentionally blank.

Change log for Japan District Design Guide Version 4.0 - Appendix

Appendix D Added MCIPAC-MCB CAMP BUTLER POLICY LETTER 3-19, "Supplement to Unified Facilities Criteria 4-010-01 Minimum Antiterrorism Standards for Buildings in Japan", and Protective Design Center Technical Report PDC-TR 12-08 Rev 3, "Standoff Distances for Japanese Conventional Construction" as Appendix D

This page is intentionally blank.

APPENDIX A - FIRE RATED GYPSUM BOARD ASSEMBLIES

This appendix provides authorization and documentation for two Japanese wall assemblies that are acceptable for use in Japan District projects. Documentation includes the following:

- Acceptable use memo from Mark Jones
- A21 – Yoshino Fire Resistant System Installation Instructions, English
- A21 – Yoshino Fire Resistant System Installation Instructions, Japanese
- B15 – Yoshino Fire Resistant System Installation Instructions, English
- B15 – Yoshino Fire Resistant System Installation Instructions, Japanese

This page is intentionally blank.

Yoshino Fire Resistant System

A21

1 Hour Fire Resistant Structure Accredited by Minister of Land, Infrastructure, Transport and Tourism

FP060NP-0197

FP060NP-0198

Installation Instructions

[September 2012 version]

Yoshino Gypsum Co., Ltd.

Note: This is unofficial trial translation by JED to understand the contents. So, please follow the official Japanese version issued by Yoshino Co., Ltd.

To construct safely and correctly

When a dry type fire resistant sound insulating wall is constructed as party wall of multiple dwelling house (condominium, etc.), it is obligated to comply with Ordinance of Ministry of International Affairs and Communications No. 40 based on “Special Standard [Fire Services Act Enforcement Ordinance, Article 29-4]”, and that detailed provisions of Fire Station Prevention Section Notice No. 188 and 500. That Notice No. 500 specifies “it is limited to when construction control system is arranged” as construction condition.

“Being limited to when construction control system is arranged” means that the following requirements are fulfilled:

1) Construction method of dry type wall is specified by construction specification, etc. made by the maker.
2) Those who are assigned as supervisors, etc. on construction sites have completed technical training provided by the maker.
3) Construction status is checked with self-inspection and the result is stored.

“Standard Construction Instruction” corresponds to the above 1.

Regarding the above 2, in order to thoroughly implement “construction control of Fire Resistant, Sound Insulation System”, Yoshino Gypsum Board has an established system that <Tiger Fire Resistant Sound Insulation Structure Construction Study Group> or other equivalent organizations provide technical training like practical skill training which assumes on-site construction and award a certificate of completion <license> to those who completed the training.

The above mentioned is intended to arrange the construction control system to ensure Fire Resistance Performance of dry type party wall at construction sites. Since this concept is required for construction of Fire Wall except party wall, it shall be ensured to implement construction by following contents of this “Standard Construction Instruction”.

Others:

1. Make sure to read this “Standard Construction Instruction” carefully before construction and understand it well.
2. Keep the “Standard Construction Instruction” in place to check it at any time throughout the construction.

Contents

1. General Rules 4
1.1 Scope 4
1.2 Full dissemination 4
1.3 Construction 4
1.4 Report 4
2. Safety measure 5
3. Packaging, transportation, lifting and storage of boards 5
3.1 Packaging 5
3.2 Transportation 5
3.3 Lifting 5
3.4 Storage 5
3.5 Disposal of remaining materials, cleaning 6
4. Materials 6
4.1 Major component 6
4.2 Sub-constituent material 7
5. Working instruction 9
5.1 Standard construction procedure 9
5.2 Working instruction 10
6. Inspection 14
6.1 Self inspection 14
6.2 Witness inspection 15

1. General Rules

1.1 Scope

This Standard Construction Instruction applies to Yoshino Fire Resistant System A21.

Yoshino Fire Resistant System A21

1 Hour Fire Resistant Structure Accredited by Minister of Land, Infrastructure, Transport and Tourism
FP060NP-0197 (Where sound insulating materials are not inserted in hollow parts)
FP060NP-0198 (Where sound insulating materials are inserted in hollow parts)

Horizontal section (specification of accreditation where sound insulating materials are not inserted in hollow parts)

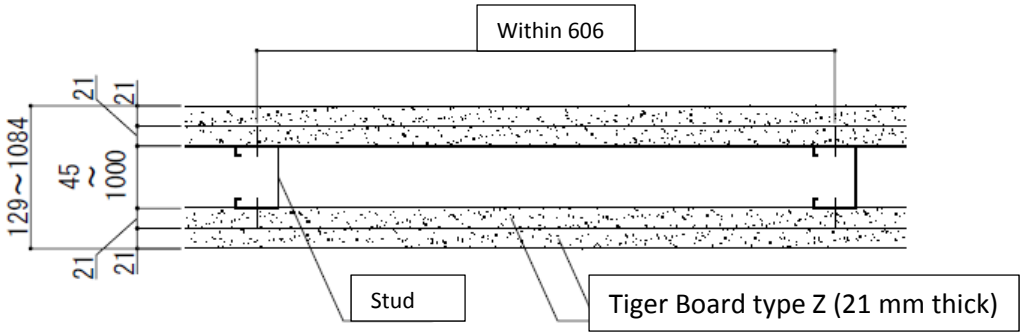

*Standard stud interval shall be 455 mm.
*A shape (45, 50, 65, 75, 90 or 100 type, etc.) of chosen stud according to a wall height differs.
*The drawings in this document indicates nominal dimension value of each component.

1.2 Full dissemination

When constructing Yoshino Fire Resistant System A21, make sure that all workers are informed and understand this Standard Construction Instruction through a seminar or other ways.

1.3 Construction

Contractors must ensure to construct accurately according to this instruction. When unwritten things in the instruction or questions arise, the contractors need to discuss with Yoshino Gypsum Co., Ltd. and consider construction methods.

1.4 Report

When construction is completed, contractors need to report to a supervisor of the prime contractor for construction and have inspection.

2. Safety measure

Safety comes first at works on sites and each one shall be aware of it and act accordingly. If there are dangerous procedures or safety control can not be secured, workers need to even stop working, get united, and give a top priority to safety control. Completing the construction without injuries until the end shall be a principle.

<Notice to Tiger Board type>

* Yoshino Gypsum Co., Ltd. does not guarantee the performance if it is used for purposes except the specified application.

* When cutting the board for construction, pay attention to collecting dust, etc. and use dust prevention cutter or dust collecting circular saw. Also, for dusts generated at works like sanding, it is recommended to wear dust prevention mask or safety glass.

*If many layers are piled up for storing, it may fall down.

*Regarding disposal of waste materials of Tiger Board type and cleaning drainage, be careful not to cause environmental pollutions.

3. Packaging, transportation, lifting and storage of boards

3.1 Packaging

For storage packaging, a stack usually consists of 60 sheets of reinforced gypsum boards (21 mm).

3.2 Transportation

Transportation of reinforced gypsum boards, etc. shall be discussed with a supervisor of the prime contractor for construction and be implemented based on on-site transportation plan.

3.3 Lifting

Lifting to each floor shall be done with a lift provided on site and follow on-site lifting criteria.

3.4 Storage

1) Place the boards evenly not to fall down or get chipped.
2) Put a distance of at least 1 m from walls.
3) Do not put on any slope or marked areas.
4) Do not put on uneven surface or wet place. If water may leak from upper floors, cure with sheet, etc. in advance.
5) Store reinforced gypsum boards, etc. on stands with uniform height, and edges of the boards shall not be outside the stand like the following drawings to prevent boards from waving or getting wrapped. Also, top board of each pile shall be placed facing down.

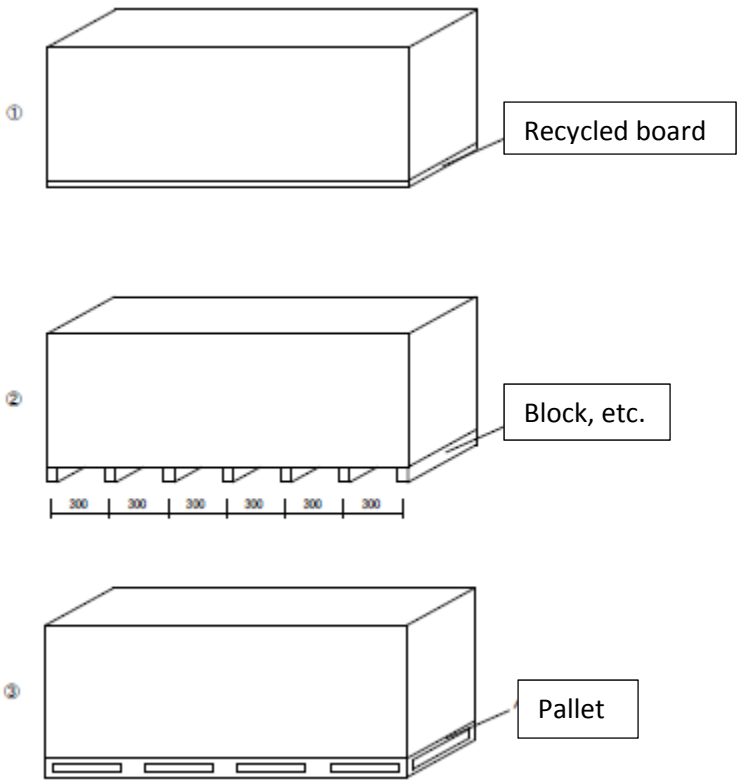

(*In case of long boards, (1) or (3) shall be implemented)

6) When 2 stacks are piled up, blocks of first and second layer stack shall be aligned.

7) Do not use reinforced gypsum boards, etc. as stepping-stool.

3.5 Disposal of remaining materials, cleaning

Remaining reinforced gypsum boards and other remaining materials shall be collected at designated places on each floor and the places shall be cleaned every day.

4. Materials

4.1 Major component

4.1.1 Reinforced gypsum board (GB-F(V))

Product name: Tiger Board Type Z (hereinafter referred to as TBZ)

1) Specification Non-combustible NM-8615(GB-F(V)), JIS A 6901
2) Dimension
   Thickness 21 mm
   Size (standard) 606 mm x 1,820, 2,420, 2,730 mm
3) Performance
   Specific gravity 0.75 or more
   Moisture content 3 % or less

4.1.2 Top and bottom runner

JIS G 3302 or JIS G 3313, etc.

⊏⁻45 to 1,000 x 30 to 75 x 0.4 mm or more

4.1.3 Stud

JIS G 3302 or JIS G 3313, etc.

⊏⁻45 to 1,000 x 45 to 75 x 0.4 mm or more

□ - 45 to 1,000 x 40 to 75 x 0.4 mm or more

Selection sample of wall heights and studs (when using JIS A 6517 studs and bracing)

Wall height up to 2.7 m : ⊏⁻ 50 x 45 x 0.8 mm

Wall height up to 4.0 m : ⊏⁻ 65 x 45 x 0.8 mm or ⊏⁻ 75 x 45 x 0.8 mm

Wall height up to 4.5 m : ⊏⁻ 90 x 45 x 0.8 mm

Wall height up to 5.0 m : ⊏⁻100 x 45 x 0.8 mm

4.1.4 Bracing (use the followings when providing as necessary)

JIS G 3302 or JIS G 3313, etc.

⊏⁻19 to 25 x 10 x 0.9 mm or more

4.1.5 Glass wool, etc. (use the followings when inserting as necessary)

Glass wool: JIS A 6301, JIS A 9504 or JIS A 9521

Density 10 kg/m^3 or more, Thickness 12 mm or more

Rock wool: JIS A 6301, JIS A 9504 or JIS A 9521

Density 10 kg/m^3 or more, Thickness 25 mm or more

4.2 Sub-constituent material

4.2.1 Fixing pin for runner

Concrete nail: Ø 2.0 mm or more x 10 mm or more

Buffer pin: Ø 2.0 mm or more x 10 mm or more

And other anchor piece for fixing, etc.

4.2.2 Stud spacer (use the followings when providing as necessary)

Board of 0.5 mm or more thick specified by JIS G 3302 or 3313, etc.

4.2.3 Tapping screw, staple, etc.

1) Tapping screw that is treated rust prevention

Ø 3.5 mm or more x 32 mm or more

2) Staple that is treated rust prevention

Staple for fixing top layer TBZ 4 mm or more (W) x 32 mm or more (L)

Staple for fixing glass wool, etc. 4 mm or more (W) x 16 mm or more (L), etc.

(Spindle pin (25 mm or more in length) is also acceptable for fixing glass wool, etc.)

4.2.4 Adhesive

Inorganic adhesive “Tiger Tora Board” (made by Yoshino Gypsum Board Co., Ltd.) or vinyl acetate resin adhesive “Yoshino Sakubi Bonding”, etc.

4.2.5 Materials for joint finishes, etc. (use the followings or filling materials when providing joint finishes as necessary)

1) Joint compound (putty)
   “Tiger U Light”, “Tiger F Light”, “Tiger SP Light”, “Tiger Light”, “Tiger V Seal Putty”, “Tiger GL Putty”, “Tiger UP Putty”, “Tiger F Top Putty”, “Tiger SP Putty”, “Tiger Putty”, “Tiger Joint Cement” (made by Yoshino Gypsum Board Co., Ltd.), etc.
2) Joint tape
   “Tiger Joint Tape”, “Tiger G Fiber Tape”, etc.

4.2.6 Filling material

1) Fire resistant joint filler
   Rock wool “Tiger Rock Felt” (10 mm thick x 21 mm wide x 1,000mm long), etc.
2) Inorganic Filling material
   “Tiger Gyptight”, “Tiger Gypseal” (made by Yoshino Gypsum Co., Ltd.), etc.
3) Sealant
   Urethane system “Tiger U Tight”, modified silicone-based “Tiger Fire Resistant Sealant”, etc.

5. Working instruction

5.1 Standard construction procedure

Mark a location of wall

↓

Provide runners

↓

Position studs

↓

Provide bracing (only when providing as necessary)

↓

Side A, fill up runner joints interface with fire resistant joint filler “Tiger Rock Felt”

↓

Side A, provide underlayer boards

↓

Side A, provide top layer boards

↓

Side A, fill up joints interfaces of top layer boards (“Tiger Gpytight” or “Tiger U Tight”)

↓

Provide glass wool, etc. from B side (only when inserting as necessary)

↓

Side B, fill up runner joints interface with fire resistant joint filer “Tiger Rock Felt”

↓

Side B, provide underlayer boards

↓

Side B, provide top layer boards

↓

Side B, fill up top layer board joint interface (Tiger Gyptight” or “Tiger U Tight”)

↓

Inspection

↓

Joint and other finishes (These finishes are not essential for getting authorization for fire resistance.)

↓

Finish (This is not essential for getting authorization of fire resistance.)

↓

Inspection

↓

Delivery

5.2 Working instruction

5.2.1 Mark

1) If a marking surface has sand, other dirt or unevenness, clean well in advance then mark.
2) Mark a center line of given partition wall from a center line or offset line of frame of the building and mark an end line of provided runner on top and bottom slab surfaces.
3) At a part where a partition is long, be careful for especially straightness.
4) After completing marking and checking locations of the marks, get approval from a supervisor of the prime contractor for construction.

5.2.2 Provide runners

1) Fix top and bottom runners to accurately marked slab surface, etc. with fixing pins, etc.
2) Insert a fixing pin at around 50mm from the end parts of runners and fix middle parts at intervals not exceeding 900 mm.
3) When providing top runner to steel beam having fire resistant coating, prior to fire resistant coating construction, fix a runner-receiving piece material by welding, etc., provide top runner and provide fire resistant coating to steel.

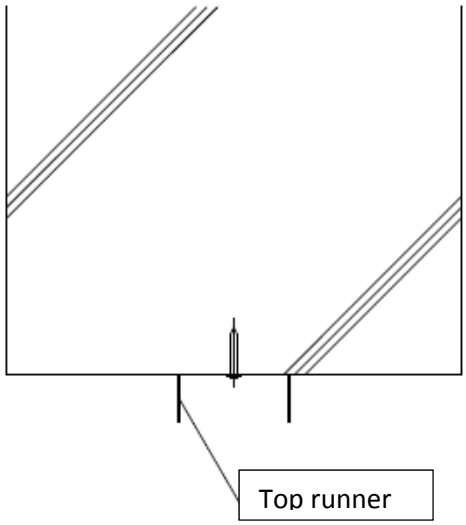

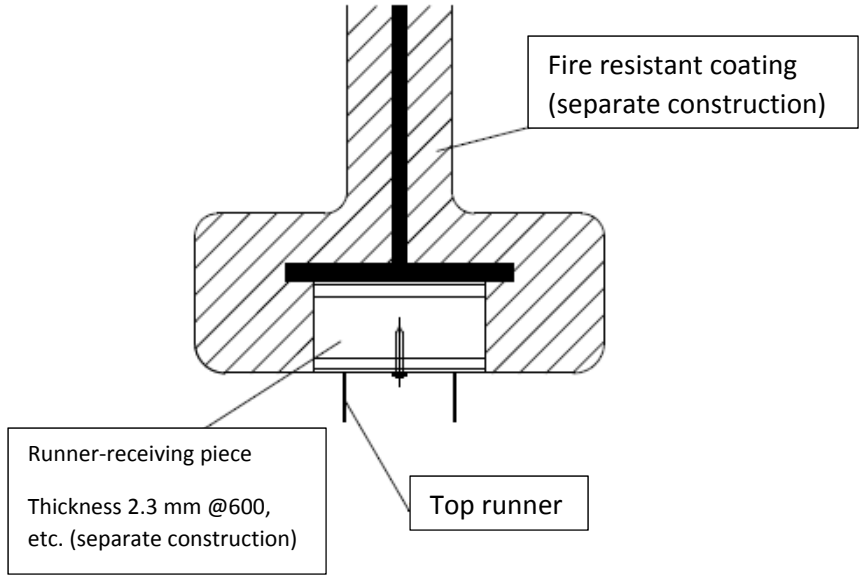

<Providing of top runner to ceiling slab and RC> <Providing of top runner to steel beam>

4) Top and bottom runners shall not be contacted but put a distance of around 10 mm from wall or pillar, etc.

5.2.3 Position studs

1) Cut a stud a little (around 10 mm) shorter than internal height of top and bottom runner. Choose a shape of stud according to wall height.
2) Provide a stud at intervals not exceeding 606 mm (the standard is 455 mm).
3) Provide bracing at intervals of around 1,200 mm as necessary.
4) Provide stud spacer at intervals not exceeding 600 mm.

5.2.4 Fill up with fire resistant joint filler

1) Provide “Tiger Rock Felt” (10 mm thick x 21 mm wide x 1,000 mm long) to joints interface like under slab, under beam, wall, and floor before underlaying TBZ.
2) Provide “Tiger Rock Felt” to frame surface of the building and make sure that no gap between joints is created.

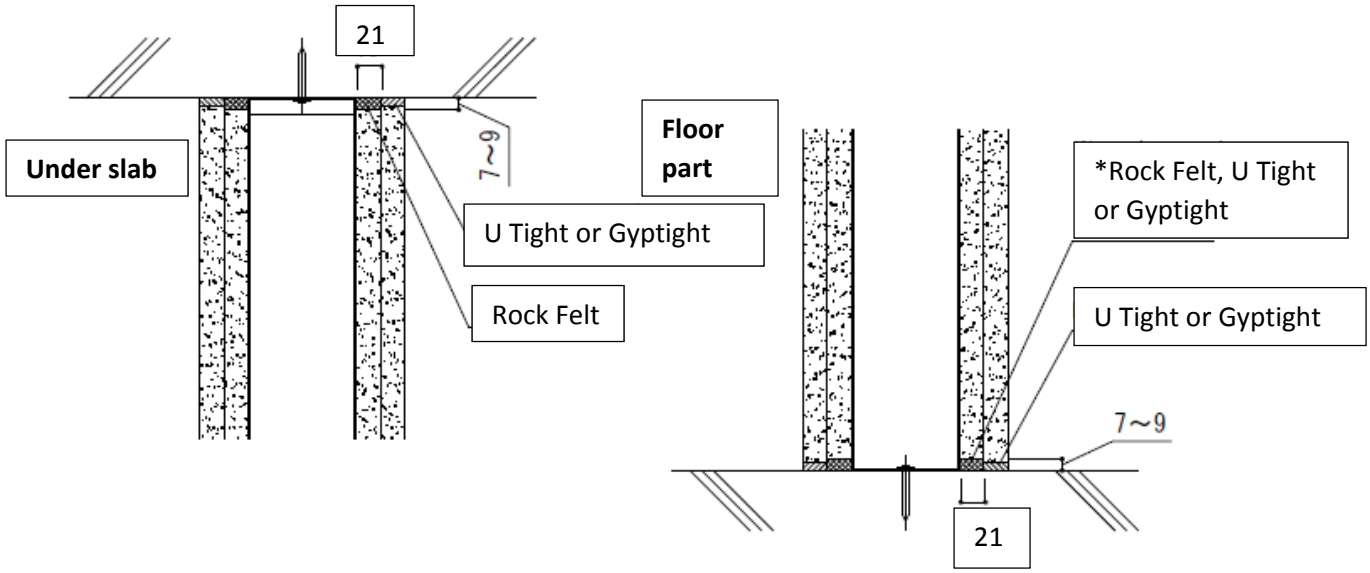

*When “Tiger U Tight” is used for underlaying for floor part, make sure to use “Tiger Gyptight” for overlaying.

5.2.5 Provide underlayer TBZ

1) Provide TBZ horizontally or vertically in a manner to minimize loss.
2) Fix TBZ on stud with tapping screws while lightly pushing “Tiger Rock Felt” laid under slab, beam, or on wall, or floor. When fixing, be careful not to create a gap with “Tiger Rock Felt”. When “Tiger Rock Felt” was not used for floor parts, create a gap of approximately 5mm between TBZ and floor slab, then fix it. Fill up the gapped part with “Tiger Gyptight” or “Tiger U Tight”, etc. until the gap is eliminated. However, when not using “Tiger Gyptight” at <5.2.7 Process joints interface> at a time of providing a top layer, make sure to use “Tiger Gyptight” in the gapped part for underlaying.
3) While adjusting TBZ not to make roughness at parts contacted to studs, fix it with tapping screws at intervals not exceeding 300 mm. Indent a screw head a little deeper than TBZ surface.
4) TBZs shall be butted each other not to make a gap at joint parts.

5.2.6 Provide top layer TBZ

1) TBZ shall be provided vertically in principle and lay out not to overlap underlayer TBZ with joints.
2) Adjust TBZ at joint parts with concrete wall, etc. so that gapped parts become 5 mm or less.
3) Temporarily fix TBZ by spotting 200 g/m^2 or more of inorganic adhesive “Tiger Tora Bonding” or vinyl acetate resin adhesive “Yoshino Sakubi Bonding”, etc. then fix TBZ with staples. An interval of staples shall be within 200 mm and 1 staple or more shall be used at 1 place.
4) When providing TBZ inside a staircase or elevator shaft, consider wind pressure and earthquake and fix it on stud with tapping screws of minimal Ø3.5 mm x minimal 50 mm at intervals not exceeding 900 mm as necessary.
5) TBZs shall be butted each other at joint parts not to create a gap.

5.2.7 Finish joints interface

1) After completing providing top layer TBZ, fill up joints interface of wall, floor, under slab, or under beam with “Tiger Gyptight” or “Tiger U Tight”, etc. not to have a gap. However, when “Tiger U Tight” was used at underlayer joints interfaces of floor part, make sure to use “Tiger Gyptight”.
2) Fill up joints interfaces of spray fire resistant coating with “Tiger Gypseal”, etc. not to have a gap.

5.2.8 Insert glass wool, etc. (only when inserting)

1) After processing joints interfaces of one side, insert glass wool, etc. in hollow parts and fix it to underlayer TBZ with staples or spindle pins not to fall down.
2) Make a notch in parts connecting to spacer parts of studs, and insert glass wool, etc. inside stud and top and bottom runners not to create a gap.

5.2.9 Finish joint parts (only when finishing as necessary)

Joint parts, etc. of top layer TBZ shall be finished with joint tape “Tiger Joint Tape”, “Tiger G Fiber Tape” and joint compound (putty) “Tiger U Light”, “Tiger F Light”, “Tiger SP Light”, “Tiger Light”, “Tiger V Seal Putty”, “Tiger GL Putty”, “Tiger UP Putty”, “Tiger F Top Putty”, “Tiger SP Putty”, “Tiger Putty”, “Tiger Joint Cement”, etc.

5.2.10 Finish (only when finishing as necessary)

Finish by painting, pasting wall materials, spraying, etc.

5.2.11 Notes of other design, construction

1) This Standard Construction Instruction specifies materials that Yoshino recommends among the Certificate.
2) When providing foamed heat insulator to an external wall or under slab of top floor, provide this wall structure before heat insulating construction.
3) When providing this wall structure under RC beam, place a wall center at least around 80 mm inside from the beam edge, or embed anchor pieces for fixing top runner, etc. so as to prevent top runner fixing pins from losing retaining capability.
4) When welding parts such as runner-receiving pieces to steel beams, take care not to damage steel base materials.
5) When this wall structure crosses at right angles or runs in parallel under flat type deck plate, cut the lumps of deck at the left and right approximately 250 mm from the wall center so that the wall contacts the slab (refer to detailing drawing).
6) Regarding connection between hollow part of deck plate dent part and the top runner when providing top runner at deck plate, treat in the following method:
   I. Fill up hollow layer of deck plate dent with 150 kg/m^3 of rock wool until no gap. Next, paste “Tiger Gypseal” at rock wool part by pressing it down with a spatula not to make a gap. Coating “Tiger Gypseal” shall be thicker than top layer + under layer.
   II. Fill up the hollow layer of deck plate dent with 150 kg/m^3 of rock wool until no gap. At the both sides, fix one gypsum board (12.5 mm thick) on top layer surface material under deck plate with adhesive and staples, etc.

7) Since this wall structure is non-bearing partition wall structure, the method for processing the four side premises that external forces due to deformation of the building frame do not transmit partition walls and decides joints interface finishes, gapped part dimensions, etc. Deformation of the building frame like a pillar, beam and the like (including creep of floor slab) is not uniform and greatly differs depending on size of earthquakes, building structure or other factors. So, when deformations are predicted, it is necessary to take additional consideration of connection.
8) Do not provide electricity box or similar nature of any equipment to this wall structure.
9) When providing doors to this wall structure, fix openings reinforcement materials independently and directly on the building frame like floor, under slab, beam, etc. with fixing pins or by welding, etc.
10) Separate consideration should be given if a high-rise building swings due to strong winds, etc. and this wall structure needs squeak noise reduction measure.

6. Inspection

6.1 Self inspection

Process	Item	Point	Method	Criteria	Control method
Marking	Criteria mark	Dimension	Convex	±2.0 mm	Check Inspection
Providing of runner	Fixing pin	Interval	Convex	Within 900 mm	
Providing of stud	Perpendicularity of stud	Dimension	Plumb level	±2.0 mm	
	Layout	Interval	Convex	Within 606 mm	
Providing (underlayer) of TBZ	Butting	Dislocation between both plates	Scale, etc.	Within 2.0 mm	
	Joint	Gap	Visual check	No gap	
	Tapping screw	Interval	Scale, etc.	Within 300 mm	
Providing (top layer) of TBZ	Butting	Dislocation between both plates	Scale, etc.	Within 1.5 mm	
	Joint	Gap	Visual check	No gap	
	Adhesive	Weight	Balance or container	200 g/m^2 or more	
	Staple	Interval	Scale, etc.	Within 200 mm	
Glass wool, etc.	Inserting	Gap	Visual check	No gap	
Wall end part	Filling	Gap	Light	No transmitted light	

6.2 Witness inspection

Implement witness inspection based on instruction of a supervisor of the prime contractor for construction.

Certificate

MLIT Notification No.4465

March 13, 2009

Dear President Mr. Eiichiro Sudo of Yoshino Gypsum Co., LTD.,

The following construction method, etc. have been recognized to comply with the provisions of the Building Standard Law, Article 2, Item 7 and the enforcement order of the same Law, Article 107, Item 2 (Partition Wall (non-bearing wall): 1 Hour Rating) based on the provision of the same Law, Article 68-26, Paragraph 1 (including cases where it is applied mutatis mutandis pursuant to Article 88, Paragraph 1 of the same Law).

Note

1. Certificate number
   FP060NP-0197

2. Name of Accredited Construction Method, etc.
   Double Sided Reinforced Gypsum Board Laminated / Light Weight Steel Substrate Partition Wall

3. Contents of Accredited Construction Method etc.
   As per attachment

(Notice) Please keep this Certificate safe.

Kazuyoshi Kaneko

Minister of Land, Infrastructure, Transport and Tourism

Certificate <Fire Resistance Structure> (Where sound absorbing materials are not inserted in hollow parts)

Certificate

MLIT Notification No.4466

March 13, 2009

Dear President Mr. Eiichiro Sudo of Yoshino Gypsum Co., LTD.,

The following construction method, etc. have been recognized to comply with the provisions of the Building Standard Law, Article 2, Item 7 and the enforcement order of the same Law, Article 107, Item 2 (Partition Wall (non-bearing wall): 1 Hour Rating) based on the provision of the same Law, Article 68-26, Paragraph 1 (including cases where it is applied mutatis mutandis pursuant to Article 88, Paragraph 1 of the same Law).

Note

1. Certificate number
   FP060NP-0198

2. Name of Accredited Construction Method, etc.
   Man-made Mineral Fiber Heat Insulator Filled / Double Sided Reinforced Gypsum Board Laminated / Light Weight Steel Substrate Partition Wall

3. Contents of Accredited Construction Method, etc.
   As per attachment

(Notice) Please keep this Certificate safe.

Kazuyoshi Kaneko

Minister of Land, Infrastructure, Transport and Tourism

Certificate <Fire Resistance Structure> (Where sound absorbing materials are inserted in hollow parts)

Standard vertical section

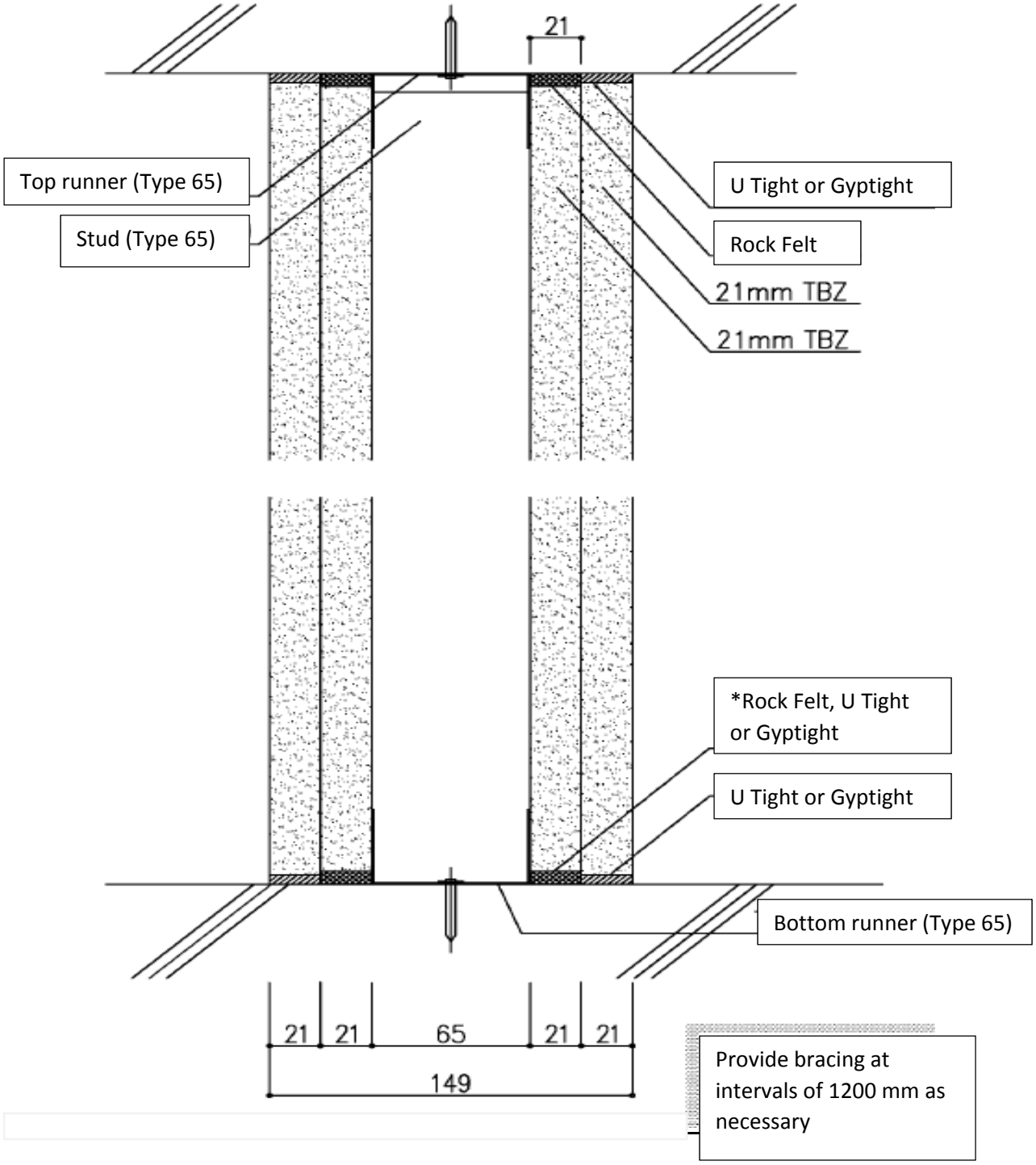

*When U Tight is used for underlaying for floor parts, make sure to use Gyptight for overlaying.

Standard horizontal section

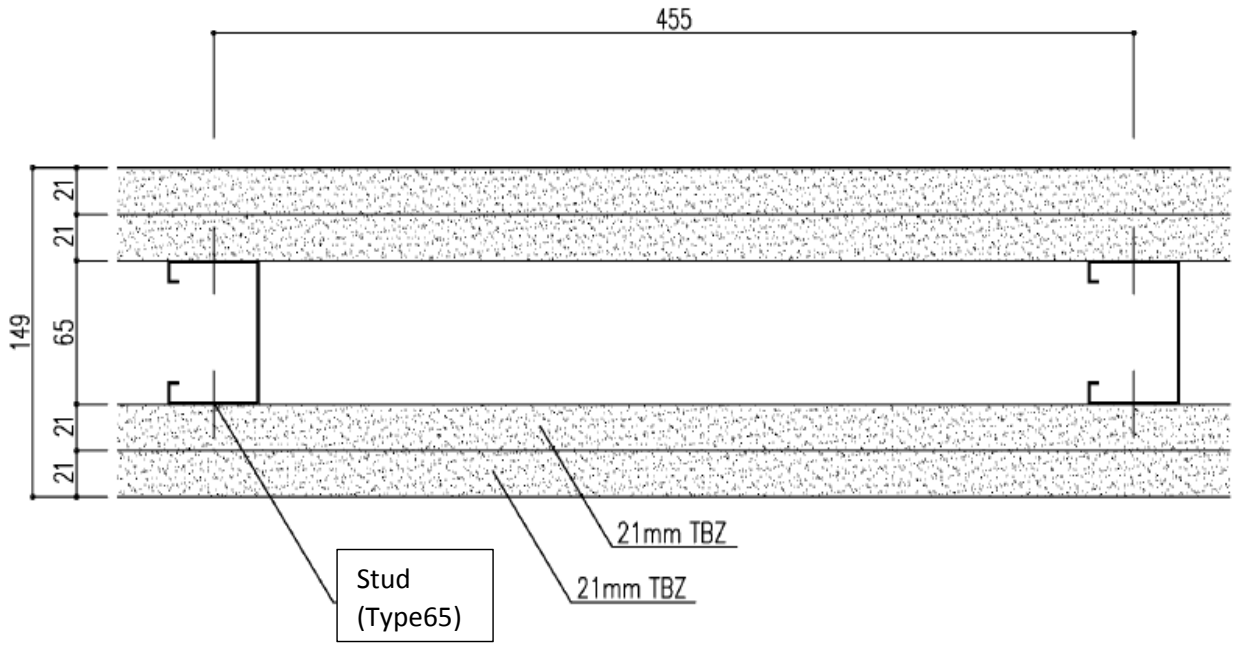

* For certification of fire resistance, stud interval shall be within 606 mm.

Standard stud interval shall be 455 mm.

This page is intentionally blank.

吉野耐火システム

A21

１時間耐火構造　国土交通大臣認定　ＦＰ０６０ＮＰ－０１９７
ＦＰ０６０ＮＰ－０１９８

標準施工指導書

[平成２４年９月版]

安全で快適な住空間を創る
YOSHINO
吉野石膏株式会社
TIGER BRAND

安全で確実に施工をしていただくために

乾式耐火遮音壁を、集合住宅（マンション等）の戸境壁等として施工する場合は“特例基準「消防法施行令２９条の４」”に基づいた総務省令第４０号、その細目を定めた消防予第１８８号及び５００号通知内容を遵守する義務があります。その５００号通知には施工条件として、「施工管理体制が整備されている場合に限る」と明記されております。

「施工管理体制が整備されている場合に限る」とは、

① 乾式壁の施工方法―メーカーが作成した施工仕様書等により明確とされていること。

② 施工現場における指導・監督等―メーカーが実施する技術研修を修了した者が選任されていること。

③ 施工状況の確認等―自主検査による確認が行われ、かつその結果が保存されていること。

の要件が整っていることです。

「標準施工指導書」が①にあたるものとなります。

②につきましては、「耐火・遮音システムの施工管理」を徹底するため、《タイガー耐火遮音構造施工研究会》またはそれに準ずる組織で、現場施工を想定した実技研修などの技術研修を実施し、研修修了者には修了証〈ライセンス〉を授与する制度を確立しております。

上記は、施工現場で乾式戸境壁の耐火性能を確保するために施工管理体制を整備することを目的としており、この考え方は戸境壁以外の耐火壁を施工する際にも必要であることから、この「標準施工指導書」の内容に従い確実に施工することとします。

その他

１．この「標準施工指導書」は、必ず施工前に注意深く読み、よく理解してください。

２．この「標準施工指導書」は、この施工全般にわたって、いつでも確認できるように保管してください。

吉野耐火システム　Ａ２１
標準施工指導書

Ｔ－００１－２

目　次

１．総　則
　１－１　適用範囲
　１－２　周知徹底
　１－３　施　　工
　１－４　報　　告

２．安全対策

３．ボードの荷姿、運搬、揚重、保管
　３－１　荷　　姿
　３－２　運　　搬
　３－３　揚　　重
　３－４　保　　管
　３－５　残材処理、清掃

４．材　料
　４－１　主構成材料
　４－２　副構成材料

５．施工要領
　５－１　標準施工手順
　５－２　施工要領

６．検　査
　６－１　自主検査
　６－２　立合い検査

７．認定書
　耐火構造

８．各部の納まり例

［平成２４年９月版］

吉野耐火システム Ａ２１
標準施工指導書

Ｔ－００１－３

① 総 則

１－１ 適用範囲

この標準施工指導書は、吉野耐火システム Ａ２１について適用する。

吉野耐火システム Ａ２１
１時間耐火構造 国土交通大臣認定 ＦＰ０６０ＮＰ－０１９７（中空部に吸音材を挿入しない場合）
ＦＰ０６０ＮＰ－０１９８（中空部に吸音材を挿入する場合）

水平断面図 （中空部に吸音材を挿入しない場合の認定の仕様）

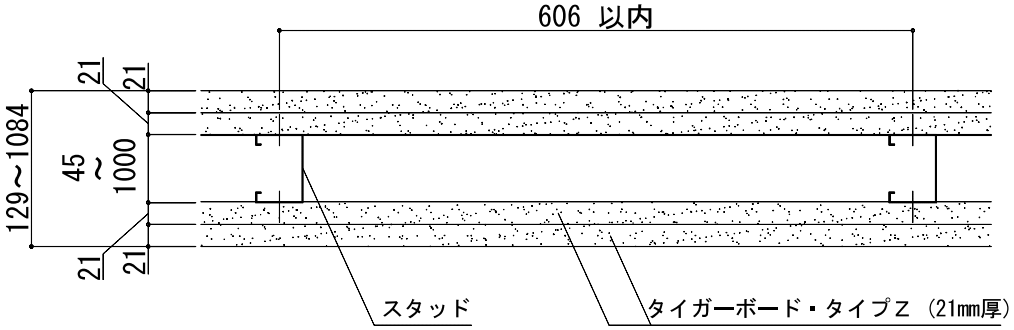

※標準のスタッド間隔は４５５㎜とする。
※壁高さに応じて選択されるスタッドの形状（４５形，５０形，６５形，７５形，９０形または１００形など）は異なります。
※本書の図面寸法値は、各部材の公称寸法を記載しております。

１－２ 周知徹底

吉野耐火システム Ａ２１の施工に際しては、この標準施工指導書にて事前に説明会、その他の方法で、作業員全員に周知徹底を図る。

１－３ 施工

施工業者は、この標準施工指導書によって、正確、確実に施工しなければならない。この標準施工指導書に明記されていない事項、または疑義が生じた場合は、吉野石膏（株）と協議し、施工方法を検討する。

１－４ 報告

施工業者は、工事が完了した時点で建設元請業者の監督員に報告し、検査を受ける。

②　安全対策

現場の作業は、安全を第一とし、各人が各々自覚した行動をとり、もし危険のある段取りや安全管理が徹底出来ない場合は、作業を中止してでも全員一体となって、安全管理を最優先し、最後まで無事故で工事を完了させることを基本とする。

《タイガーボード類の注意》
＊指定の用途以外にご使用の場合は性能を保証いたしかねます。
＊ボードを施工する際の切断作業では集塵などに留意し、防塵カッターや集塵丸鋸を使用してください。
　また、サンディングなどの作業で発生する粉塵に対しては、防塵マスクや安全メガネの着用をおすすめします。
＊在庫の際、積層段数が多いと荷くずれの危険があります。
＊タイガーボード類の廃材、洗浄排水の処理については、環境公害とならないようにご注意ください。

③　ボードの荷姿、運搬、揚重、保管

３－１　荷姿
保管荷姿は、通常、強化せっこうボード（２１㎜）で６０枚を１山としてある。

３－２　運搬
強化せっこうボードなどの搬入は、建設元請業者の監督員との打ち合わせにより、現場の搬入計画に基づいて行う。

３－３　揚重
各階への揚重は、現場設置のリフトなどで行い、現場の揚重基準に従う。

３－４　保管
（１）荷くずれ、角欠けがないように均等に置く。
（２）壁際より、最低１ｍ以上離す。
（３）傾斜面、墨出し部には置かない。
（４）凸凹面や水漏れ部には置かない。上階から漏水の恐れがある場合は、あらかじめシートなどで養生する。

（5）強化せっこうボードなどの保管は、波打ち、そりがでないように下図のように、高さのそろった台上に保管し、ボードの縁が台からはみ出ないこと。また、各山の一番上のボードは裏面を上面とすること。

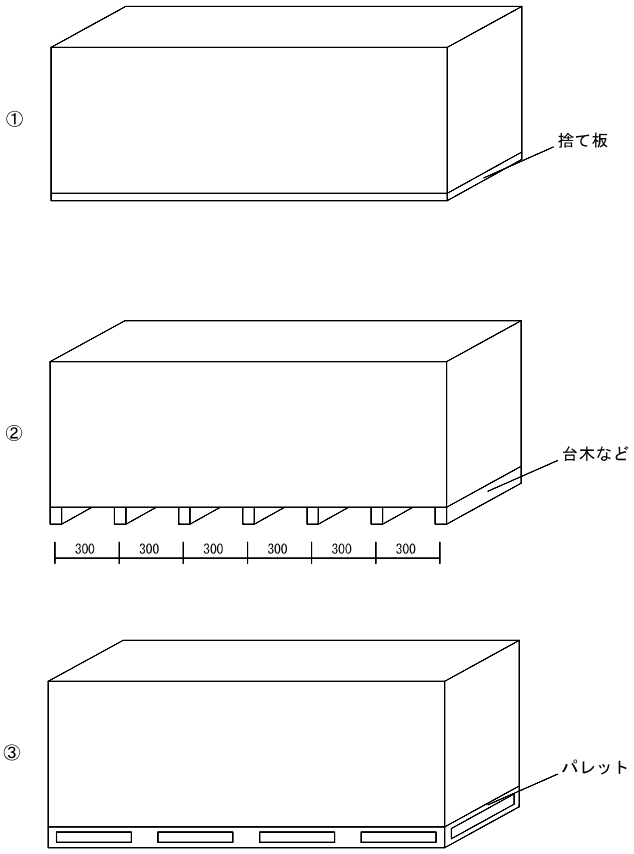

（※長尺品の場合は、①または③とする）

（6）２段積みなどを行う場合は、台木の位置を１段目と２段目でそろえること。
（7）強化せっこうボードなどを踏み台にしないこと。

３－５　残材処理、清掃

強化せっこうボード、その他の残材は、各階ごとにあらかじめ決められている指定場所に毎日清掃し、集積しておく。

④ 材 料

４－１　主構成材料

４－１－１　強化せっこうボード(ＧＢ－Ｆ（Ｖ））

商品名：タイガーボード・タイプＺ　（ 以下ＴＢＺと称する ）

（１） 規格　不燃NM－８６１５(ＧＢ－Ｆ（Ｖ）)、ＪＩＳ Ａ ６９０１

（２） 寸法

厚　さ　　２１㎜

大きさ(標準)　６０６㎜×１８２０，２４２０，２７３０㎜

（３） 性能

比　重　　０．７５以上

含水率　　３％以下

４－１－２　上部および下部ランナー

ＪＩＳ Ｇ ３３０２またはＪＩＳ Ｇ ３３１３等

⊏－４５～1,０００×３０～７５×０．４㎜以上

４－１－３　スタッド（間柱）

ＪＩＳ Ｇ ３３０２またはＪＩＳ Ｇ ３３１３等

⊏－４５～1,０００×４５～７５×０．４㎜以上

□－４５～1,０００×４０～７５×０．４㎜以上

壁高さとスタッドの選定例（ＪＩＳ Ａ ６５１７の下地材構造の場合）

壁高さ２．７ｍまで　：　⊏－　５０×４５×０．８㎜

壁高さ４．０ｍまで　：　⊏－　６５×４５×０．８㎜または⊏－７５×４５×０．８㎜

壁高さ４．５ｍまで　：　⊏－　９０×４５×０．８㎜

壁高さ５．０ｍまで　：　⊏－１００×４５×０．８㎜

４－１－４　振れ止め（必要に応じて取り付ける場合には下記のものを使用する）

ＪＩＳ Ｇ ３３０２またはＪＩＳ Ｇ ３３１３等

⊏－１９～２５×１０×０．９㎜以上

４－１－５　グラスウールなど（必要に応じて挿入する場合には下記のものを使用する）

グラスウール：ＪＩＳ Ａ ６３０１、ＪＩＳ Ａ ９５０４またはＪＩＳ Ａ ９５２１

密度１０kg/m^{3}以上　厚さ１２㎜以上

ロックウール：ＪＩＳ Ａ ６３０１、ＪＩＳ Ａ ９５０４またはＪＩＳ Ａ ９５２１

密度１０kg/m^{3}以上　厚さ２５㎜以上

４－２　副構成材料

４－２－１　ランナー固定用ピン

コンクリート釘：φ２．０㎜以上×１０㎜以上

バッファーピン：φ２．０㎜以上×１０㎜以上

その他固定用アンカーピースなど

４－２－２　スタッドスペーサー（必要に応じて取り付ける場合には下記のものを使用する）

ＪＩＳ Ｇ ３３０２またはＪＩＳ Ｇ ３３１３等に規定する板厚０．５㎜以上のもの。

４－２－３　タッピンねじ・ステープルなど

（１）タッピンねじ：防錆処理をしたもの。
φ３．５㎜以上×３２㎜以上

（２）ステープル：防錆処理をしたもの。
上張りＴＢＺの留め付け用ステープル　　幅４㎜以上×長さ３２㎜以上
グラスウールなどの留め付け用ステープル　　幅４㎜以上×長さ１６㎜以上など
（グラスウールなどの留め付け用にはスピンドルピン（長さ２５㎜以上）も使用可能）

４－２－４　接着材

無機質系接着材「タイガートラボンド」（吉野石膏製）または酢酸ビニル樹脂系接着材「吉野サクビボンド」など

４－２－５　継目処理などの材料（必要に応じて継目処理などをする場合には下記のもの、または充てん材を使用する）

（１）ジョイントコンパウンド（パテ）
「タイガーＵライト」、「タイガーＦライト」、「タイガーＳＰライト」、「タイガーライト」、「タイガーＶシールパテ」、「タイガーＧＬパテ」、「タイガーＵＰパテ」、「タイガーＦトップパテ」、「タイガーＳＰパテ」、「タイガーパテ」、「タイガージョイントセメント」（吉野石膏製）など

（２）ジョイントテープ
「タイガージョイントテープ」、「タイガーＧファイバーテープ」など

４－２－６　充てん材

（１）耐火目地材
ロックウール　「タイガーロックフェルト」（厚さ１０㎜×幅２１㎜×長さ１０００㎜）など

（２）無機質系充てん材
「タイガージプタイト」、「タイガージプシール」（吉野石膏製）など

（３）シーリング材
ウレタン系「タイガーＵタイト」、変成シリコーン系「タイガー耐火シーラント」など

⑤　施工要領

５－１　標準施工手順

墨　　出　　し
↓
ラ ン ナ ー の 取 り 付 け
↓
ス タ ッ ド の 建 て 込 み
↓
振れ止めの取り付け（必要に応じて取り付ける場合に限る）
↓
Ａ面　ランナー取合部に耐火目地材「タイガーロックフェルト」を充てん
↓
Ａ面　下張りボード張り付け
↓
Ａ面　上張りボード張り付け
↓
Ａ面　上張りボード取合部の充てん（「タイガージプタイト」または「タイガーUタイト」）
↓
Ｂ面よりグラスウールなどの取り付け（必要に応じて挿入する場合に限る）
↓
Ｂ面　ランナー取合部に耐火目地材「タイガーロックフェルト」を充てん
↓
Ｂ面　下張りボード張り付け
↓
Ｂ面　上張りボード張り付け
↓
Ｂ面　上張りボード取合部の充てん（「タイガージプタイト」または「タイガーUタイト」）
↓
検　　査
↓
継 目 部 そ の 他 の 処 理　（耐火認定上必須の処理ではありません）
↓
仕　上　げ　（耐火認定上必須の処理ではありません）
↓
検　　査
↓
引　き　渡　し

５－２　施工要領

５－２－１　墨出し

（１）墨打ち面に砂その他の汚れや凹凸がある場合は、事前によく清掃してから墨出しをする。

（２）躯体の芯墨、または返り墨から所定の間仕切壁の芯墨を出し、取り付けランナーの面墨を上、下スラブ面に出す。

（３）間仕切の長さが長いところでは、直線度に特に注意する。

（４）墨出し終了後、墨出し位置をチェックした後、建設元請業者の監督員の承認を受ける。

５－２－２　ランナーの取り付け

（１）上部および下部ランナーは、正確に墨出しされたスラブ面などに固定用ピンなどで固定する。

（２）固定用ピンは、ランナーの端部より約５０㎜の位置に打ち、中間部は９００㎜以内の間隔で固定する。

（３）耐火被覆される鉄骨梁に上部ランナーを取り付ける場合は、耐火被覆工事に先立ってランナー受けピース材を溶接などにより固定し、上部ランナーを取り付け、鉄骨の耐火被覆を施工する。

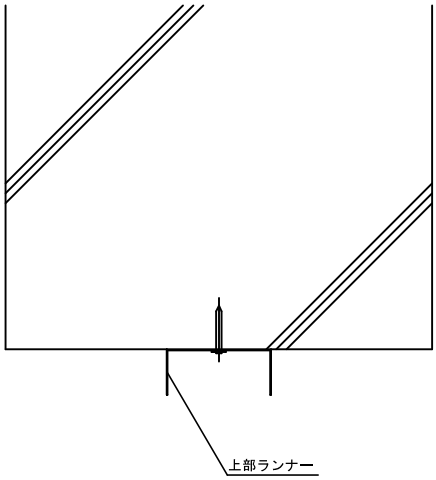

＜天井スラブおよびＲＣへの上部ランナーの取り付け＞

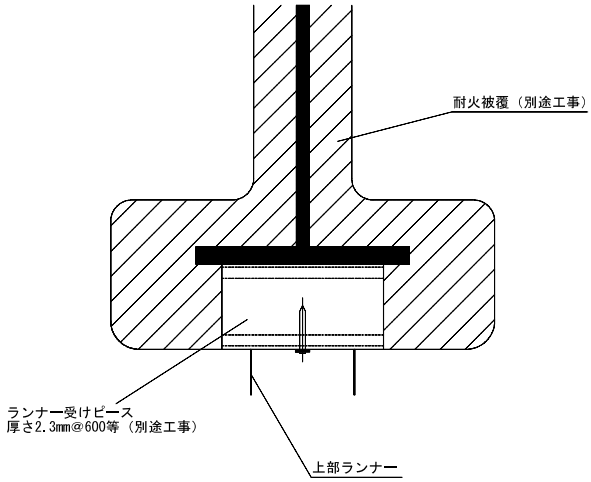

＜鉄骨梁への上部ランナーの取り付け＞

（４）上部および下部ランナーは、壁または柱などへは突き付けずに約１０㎜離す。

５－２－３　スタッドの建て込み

（１）スタッドは、上部および下部ランナーの内法高さ寸法より少し短く切断(約１０㎜)する。スタッドの形状は、壁高に応じて選定する。

（２）スタッドは、６０６㎜以内の間隔で取り付ける（標準は、４５５㎜)。

（３）振れ止めは、必要に応じて約１，２００㎜の間隔で取り付ける。

（４）スタッドスペーサーは、必要に応じて約６００㎜の間隔で取り付ける。

５－２－４　耐火目地材の充てん

（１）ＴＢＺを下張りする前に、スラブ下、梁下、壁、床などの取合部に「タイガーロックフェルト」（厚さ１０㎜×幅２１㎜×長さ１０００㎜）を張り付ける。

（２）「タイガーロックフェルト」は、躯体面に取り付け、つなぎ目の部分にすき間が生じないように十分注意する。

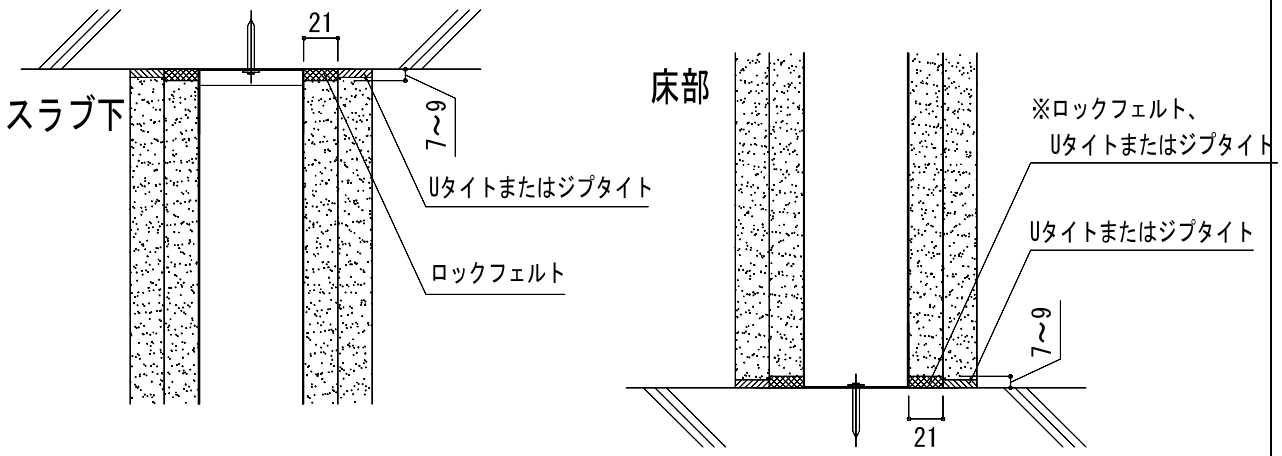

※床部の下張りに「タイガーUタイト」を使用した場合は、上張りに、必ず「タイガージプタイト」を使用する。

５－２－５　下張りＴＢＺの張り付け

（１）ＴＢＺは横張りまたは縦張りとする。

（２）ＴＢＺは、スラブ下、梁下、壁、床などに張り付けてある「タイガーロックフェルト」を軽く押しつぶすようにしながらスタッドにタッピンねじで留め付ける。留め付けの際、「タイガーロックフェルト」の間にすき間が生じないように十分注意する。
床部に「タイガーロックフェルト」を使用しなかった場合は、ＴＢＺと床スラブの間に５㎜程度の目透かしを設けて留め付ける。目透かし部に「タイガージプタイト」または「タイガーUタイト」等をすき間が残らないように充てんする。ただし、上張り張り付け時の＜５－２－７取合部の処理＞において「タイガージプタイト」を使用しない場合は必ず床スラブと下張り目透かし部には「タイガージプタイト」を使用する。

（３）ＴＢＺは、スタッドと接した部分に不陸が生じないように調整しながら、タッピンねじで３００㎜以内の間隔で留め付ける。ねじ頭は、ＴＢＺ表面より軽く凹ませる。

（４）ＴＢＺ同士の目地部は、すき間のないように互いに突き付け張りとする。

５－２－６　上張りＴＢＺの張り付け

（１）ＴＢＺは、原則として縦張りとし、下張りのＴＢＺと目地が重ならないように割り付ける。

（２）ＴＢＺは、コンクリート壁などとの取合部は、５㎜以内の目透かしとなるように調整する。

（３）ＴＢＺの留め付けは、無機質系接着材「タイガートラボンド」または酢酸ビニル樹脂系接着材「吉野サクビボンド」などを２００g/㎡以上点付けし、ステープルで留め付ける。ステープルの間隔は、２００㎜以内で１箇所あたり１本以上とする。

（４）階段室やエレベーターシャフト内側にＴＢＺを張る場合は、風圧や地震を考慮し、必要に応じてφ３．５㎜以上×５０㎜以上のタッピンねじでスタッドに９００㎜以内の間隔で留め付ける。

（５）ＴＢＺ同士の目地部は、すき間のないように互いに突き付け張りとする。

５－２－７　取合部の処理

（１）上張りＴＢＺの張り付け終了後、スラブ下、梁下、壁、床などの取合部は、「タイガージプタイト」または「タイガーUタイト」などですき間のないように充てんする。ただし、床部の下張り取合部に「タイガーUタイト」を使用した場合には、必ず「タイガージプタイト」を使用する。

（２）吹き付け耐火被覆との取合部は、「タイガージプシール」などですき間のないように充てんする。

５－２－８　グラスウールなどの挿入（挿入する場合に限る）

（１）片面の取合部の処理後、中空部にグラスウールなどを挿入し、下張りＴＢＺにステープルまたはスピンドルピンでズレ落ちないように留め付ける。

（２）グラスウールなどは、スタッドのスペーサー部に接する部分に切り込みをいれ、スタッド内および上下ランナー内に差し込むようにしてすき間の出ないように充てんする。

５－２－９　継目部等の処理（必要に応じて処理する場合に限る）

上張りＴＢＺの継目部等は、ジョイントテープ「タイガージョイントテープ」、「タイガーGファイバーテープ」とジョイントコンパウンド(パテ)「タイガーUライト」、「タイガーFライト」、「タイガーＳＰライト」、「タイガーライト」、「タイガーVシールパテ」、「タイガーＧＬパテ」、「タイガーＵＰパテ」、「タイガーFトップパテ」、「タイガーＳＰパテ」、「タイガーパテ」、「タイガージョイントセメント」などを用いて仕上げる。

５－２－１０　仕上げ（必要に応じて処理する場合に限る）

ペイント、壁装材貼り、吹付けなどで仕上げる。

５－２－１１　その他設計、施工上の留意点

（１）この施工指導書は、認定書の中から当社が推奨する材料を明記してあります。

（２）外壁や最上階スラブ下など発泡系断熱材を施工する場合は断熱工事に先立って当壁構造を施工する。

（３）ＲＣ梁下に当壁構造を設ける場合は、上部ランナー留め付けピンの保持力が低下しないように、壁の芯が梁際から８０㎜程度以上内側となるように配置するか、上部ランナー固定用アンカーピースなどを埋込みとする。

（４）ランナー受けピースなどを鉄骨梁に溶接する場合は、鉄骨母材を傷めないように配慮してください。

（５）フラット型デッキプレート下に当壁構造が直交、平行にくる場合、壁芯の左右２５０㎜程度に当たるデッキの山はカットし、壁がスラブまで当たるようにする（納まり図参照）。

（６）デッキプレートに上部ランナーを取り付けた場合のデッキプレート凹部の中空層と上部ランナーとの納まりについては、以下の方法で処理をする。

① デッキプレート凹部の中空層にロックウール１５０kg/m^{3}をすき間なく充てんする。次にロックウール部分に「タイガージプシール」をへらなどで押しつけながらすき間なく塗り付ける。「タイガージプシール」の塗り厚は、上張り＋下張りの厚さ以上とする。

② デッキプレート凹部の中空層にロックウール１５０kg/m^{3}をすき間なく充てんする。その両側には１２．５㎜厚せっこうボード１枚をデッキプレート下の上張り面材に接着材とステープルなどで留め付ける。

（７）当壁構造は非耐力間仕切壁構造のため、その四周処理法は躯体の変形等による外力が間仕切壁に伝わらないことを前提として取合部の処理、目透かし寸法などを決めております。柱、梁、などの躯体の変形（床スラブのクリープ含む）は一様ではなく、地震の大きさや建物の構造、またはその他の要因により大きく異なりますので、変形が予想される場合には別途、納まりをご検討ください。

（８）当壁構造に電気ボックス類は、取り付けない。

（９）当壁構造にドアを取り付ける場合は、開口部補強材を独立して、床、スラブ下、梁などの躯体に直接固定用ピンまたは溶接などにより固定する。

（１０）高層建築物が強風等により揺れて、当壁構造にきしみ音低減対策が必要な場合は、別途ご検討ください。

⑥ 検 査

６－１ 自主検査

工 程	項 目	要 点	方 法	基 準	管理方式
墨 出 し	基準墨	寸 法	コンベックス	±２．０㎜	チェック検査
ランナー取り付け	固定用ピン	間 隔	コンベックス	９００㎜以内	
スタッド建て込み	スタッドの垂直度	寸 法	下げ振り水準器	±２．０㎜	
	割り付け	間 隔	コンベックス	６０６㎜以内	
ＴＢＺ張り付け（下張り）	突き付け	目違い	スケール等	２．０㎜以内	
	目 地	すき間	目 視	すき間がないこと	
	タッピンねじ	間 隔	スケール等	３００㎜以内	
ＴＢＺ張り付け（上張り）	突き付け	目違い	スケール等	１．５㎜以内	
	目 地	すき間	目 視	すき間がないこと	
	接着材	重 量	秤または容器	２００g/㎡以上	
	ステープル	間 隔	スケール等	２００㎜以内	
グラスウールなど	挿 入	すき間	目 視	すき間がないこと	
壁 端 部	充てん	すき間	ライト	透過光のないこと	

６－２ 立合検査

立合検査は、建設元請業者の監督員の指示に基づいて行う。

認　定　書

国住指第 4465 号
平成 21 年 3 月 13 日

吉野石膏株式会社
代表取締役社長　須藤 永一郎　様

国土交通大臣　　金子　一義

下記の構造方法等については、建築基準法第 68 条の 26 第 1 項（同法第 88 条第 1 項において準用する場合を含む。）の規定に基づき、同法第 2 条第七号及び同法施行令第 107 条第二号（間仕切壁（非耐力壁）：1 時間）の規定に適合するものであることを認める。

記

1. 認定番号
   FP060NP-0197

2. 認定をした構造方法等の名称
   両面せっこうボード・強化せっこうボード張／軽量鉄骨下地間仕切壁

3. 認定をした構造方法等の内容
   別添の通り

（注意）この認定書は、大切に保存しておいてください。

認　定　書

国住指第　4466　号
平成 21 年 3 月 13 日

吉野石膏株式会社
代表取締役社長　須藤 永一郎　様

国土交通大臣　　金子　一義

下記の構造方法等については、建築基準法第 68 条の 26 第 1 項（同法第 88 条第 1 項において準用する場合を含む。）の規定に基づき、同法第 2 条第七号及び同法施行令第 107 条第二号（間仕切壁（非耐力壁）：1 時間）の規定に適合するものであることを認める。

記

1. 認定番号
   FP060NP-0198

2. 認定をした構造方法等の名称
   人造鉱物繊維断熱材充てん／両面せっこうボード・強化せっこうボード張／軽量鉄骨下地間仕切壁

3. 認定をした構造方法等の内容
   別添の通り

（注意）この認定書は、大切に保存しておいてください。

標準垂直断面図

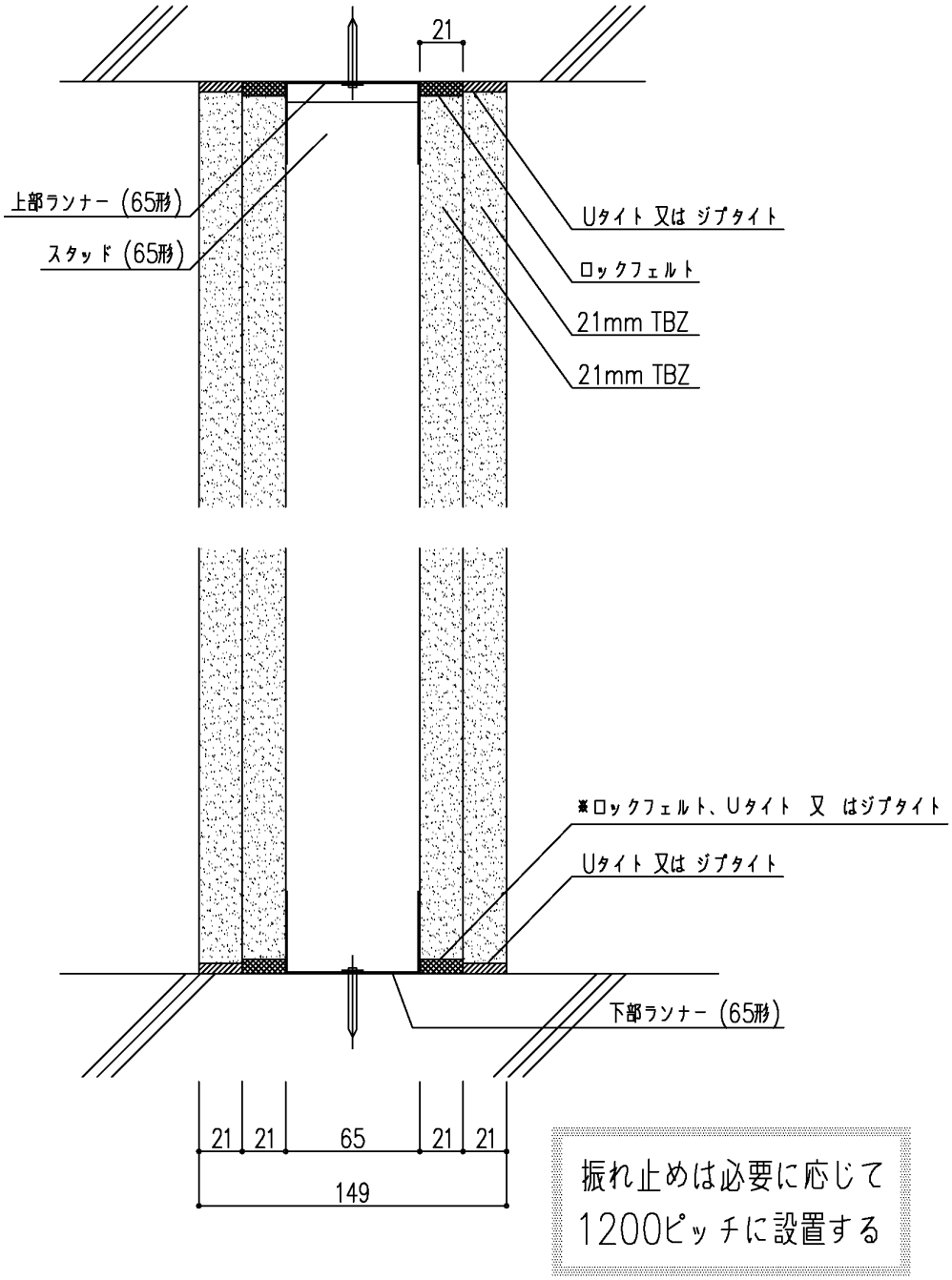

※床部の下張りにUタイトを使用した場合は、上張りに必ずジプタイトを使用する。

図面名　コンクリートスラブ、床との納まり

[平成２４年９月版]

吉野耐火システム　Ａ２１ 標準施工指導書	Ｔ－００１－　１６

標準水平断面図

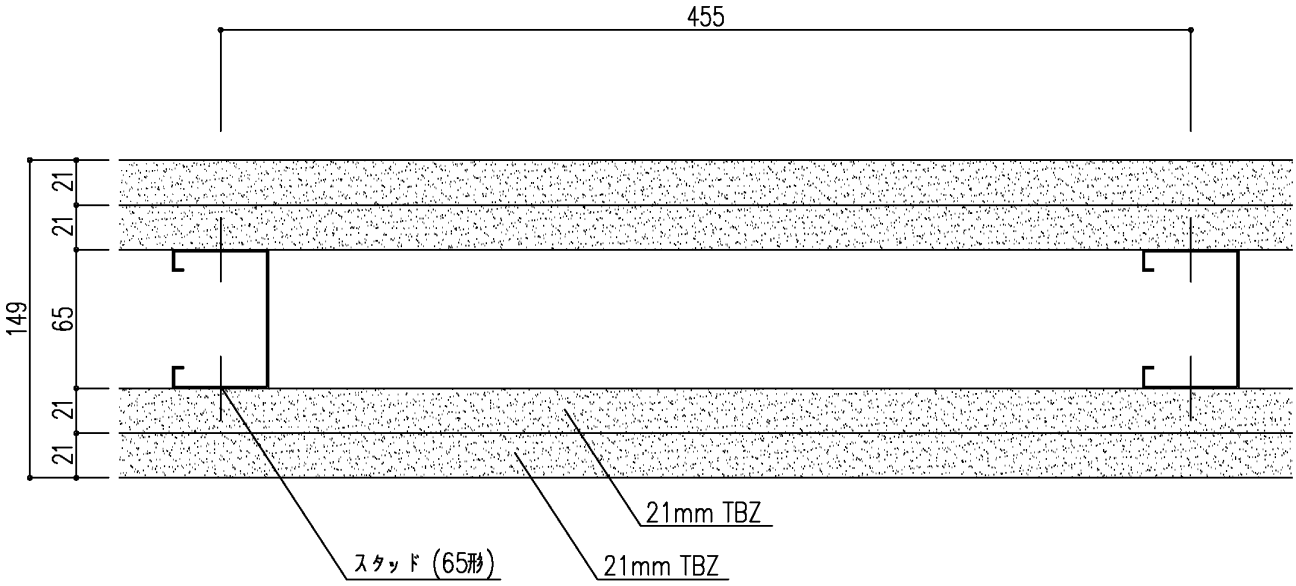

※耐火認定上のスタッド間隔は606mm以内
標準のスタッド間隔は455mmとする。

	図面名　水平断面図 ［平成２４年９月版］

This page is intentionally blank.

Yoshino Fire Resistant System

B15

1 Hour Fire Resistant Structure Accredited by Minister of Land, Infrastructure, Transport and Tourism

FP060NP-0174

FP060NP-0175

Installation Instructions

[April 2014 version]

Yoshino Gypsum Co., Ltd.

Note: This is unofficial trial translation by JED to understand the contents. So, please follow the official Japanese version issued by Yoshino Co., Ltd.

To construct safely and correctly

When a dry type fire resistant sound insulating wall is constructed as party wall of multiple dwelling house (condominium, etc.), it is obligated to comply with Ordinance of Ministry of International Affairs and Communications No. 40 based on “Special Standard [Fire Services Act Enforcement Ordinance, Article 29-4]”, and that detailed provisions of Fire Station Prevention Section Notice No. 188 and 500. That Notice No. 500 specifies “it is limited to when construction control system is arranged” as construction condition.

“Being limited to when construction control system is arranged” means that the following requirements are fulfilled:

1) Construction method of dry type wall is specified by construction specification, etc. made by the maker.
2) Those who are assigned as supervisors, etc. on construction sites have completed technical training provided by the maker.
3) Construction status is checked with self-inspection and the result is stored.

“Standard Construction Instruction” corresponds to the above 1.

Regarding the above 2, in order to thoroughly implement “construction control of Fire Resistant, Sound Insulation System”, Yoshino Gypsum Board has an established system that <Tiger Fire Resistant Sound Insulation Structure Construction Study Group> or other equivalent organizations provide technical training like practical skill training which assumes on-site construction and award a certificate of completion <license> to those who completed the training.

The above mentioned is intended to arrange the construction control system to ensure Fire Resistance Performance of dry type party wall at construction sites. Since this concept is required for construction of Fire Wall except party wall, it shall be ensured to implement construction by following contents of this “Standard Construction Instruction”.

Others:

1. Make sure to read this “Standard Construction Instruction” carefully before construction and understand it well.
2. Keep the “Standard Construction Instruction” in place to check it at any time throughout the construction.

Contents

1. General Rules 5
1.1 Scope 5
1.2 Full dissemination 5
1.3 Construction 5
1.4 Report 6
2. Safety measure 6
3. Packaging, transportation, lifting and storage of boards 6
3.1 Packaging 6
3.2 Transportation 6
3.3 Lifting 6
3.4 Storage 6
3.5 Disposal of remaining materials, cleaning 7
4. Materials 7
4.1 Major component 7
4.1.1 Reinforced gypsum board (GB-F) 7
4.1.2 Top and bottom runner 8
4.1.3 Stud 8
4.1.4 Bracing (use the followings when providing as necessary) 8
4.1.5 Glass wool, etc. (use the followings when inserting as necessary) 8
4.2 Sub-constituent material 8
4.2.1 Fixing pin for runner 8
4.2.2 Stud spacer 8
4.2.3 Tapping screw, staple, etc. 8
4.2.4 Adhesive 9
4.2.5 Materials for joint finishes, etc. (use the followings when providing joint finishes as necessary) 9
4.2.6 Filling material 9
5. Working instruction 10
5.1 Standard construction procedure 10
5.2 Working instruction 11
5.2.1 Mark 11
5.2.2 Provide runners 11

5.2.3 Position studs 12
5.2.4 Fill up with fire resistance joint filler 12
5.2.5 Provide underlayer TBZ 13
5.2.6 Provide top layer TBZ 13
5.2.7 Finish joints interface 14
5.2.8 Insert glass wool, etc. (only when inserting) 14
5.2.9 Finish joint parts (only when finishing as necessary) 14
5.2.10 Finish (only when finishing as necessary) 14
5.2.11 Notes of other design, construction 14
6. Inspection 15
6.1 Self inspection 15
6.2 Witness inspection 16
..... 19

1. General Rules

1.1 Scope

This Standard Construction Instruction applies to Yoshino Fire Resistant System B15.

Yoshino Fire Resistant System B15

1 Hour Fire Resistant Structure Accredited by Minister of Land, Infrastructure, Transport and Tourism
FP060NP-0174 (Where sound insulating materials are not inserted in hollow parts)
FP060NP-0175 (Where sound insulating materials are inserted in hollow parts)

Horizontal section (specification of accreditation where sound insulating materials are not inserted in hollow parts)

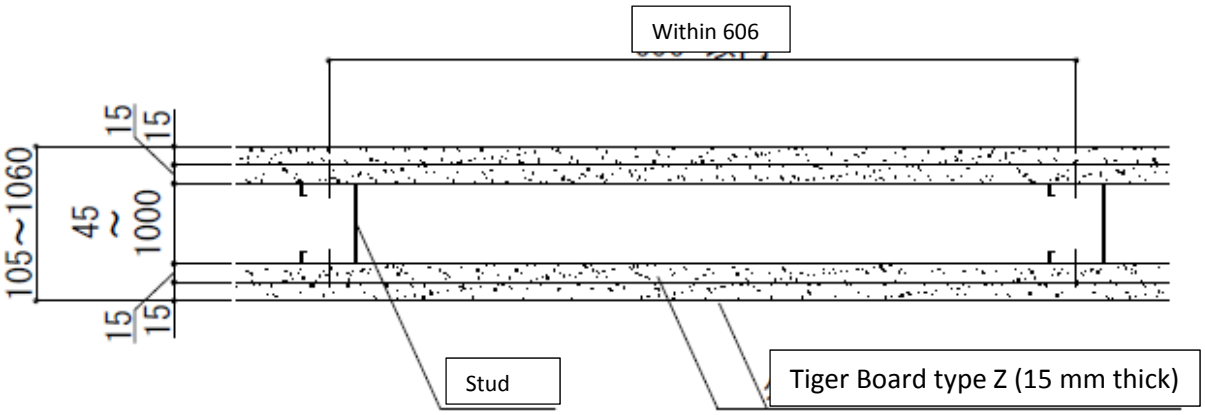

*Standard stud interval shall be 455 mm.
*A shape (45, 50, 65, 75, 90 or 100 type, etc.) of chosen stud according to a wall height differs.
*The drawings in this document indicates nominal dimension value of each component.

1.2 Full dissemination

When constructing Yoshino Fire Resistant System B15, make sure that all workers are informed and understand this Standard Construction Instruction through a seminar or other ways.

1.3 Construction

Contractors must ensure to construct accurately according to this instruction. When unwritten things in the instruction or questions arise, the contractors need to discuss with Yoshino Gypsum Co., Ltd. and consider construction methods.

1.4 Report

When construction is completed, contractors need to report to a supervisor of the prime contractor for construction and have inspection.

2. Safety measure

Safety comes first at works on sites and each one shall be aware of it and act accordingly. If there are dangerous procedures or safety control can not be secured, workers need to even stop working, get united, and give a top priority to safety control. Completing the construction without injuries until the end shall be a principle.

<Notice to Tiger Board type>

* Yoshino Gypsum Co., Ltd. does not guarantee the performance if it is used for purposes except the specified application.

* When cutting the board for construction, pay attention to collecting dust, etc. and use dust prevention cutter or dust collecting circular saw. Also, for dusts generated at works like sanding, it is recommended to wear dust prevention mask or safety glass.

*If many layers are piled up for storing, it may fall down.

*Regarding disposal of waste materials of Tiger Board type and cleaning drainage, be careful not to cause environmental pollutions.

3. Packaging, transportation, lifting and storage of boards

3.1 Packaging

For storage packaging, a stack usually consists of 80 sheets of reinforced gypsum boards (15 mm).

3.2 Transportation

Transportation of reinforced gypsum boards, etc. shall be discussed with a supervisor of the prime contractor for construction and be implemented based on on-site transportation plan.

3.3 Lifting

Lifting to each floor shall be done with a lift provided on site and follow on-site lifting criteria.

3.4 Storage

1) Place the boards evenly not to fall down or get chipped.
2) Put at least 1 m of a distance from walls.
3) Do not put on any slope or marked areas.
4) Do not put on uneven surface or wet place. If water may ~~get~~ leak~~ed~~ from upper floors, cure with sheet, etc. in advance.
5) Store reinforced gypsum boards, etc. on stands with uniform height, and edges of the boards shall not be outside the stand like the following drawings to prevent boards from waving or getting wrapped. Also, top board of each pile shall be placed facing down.

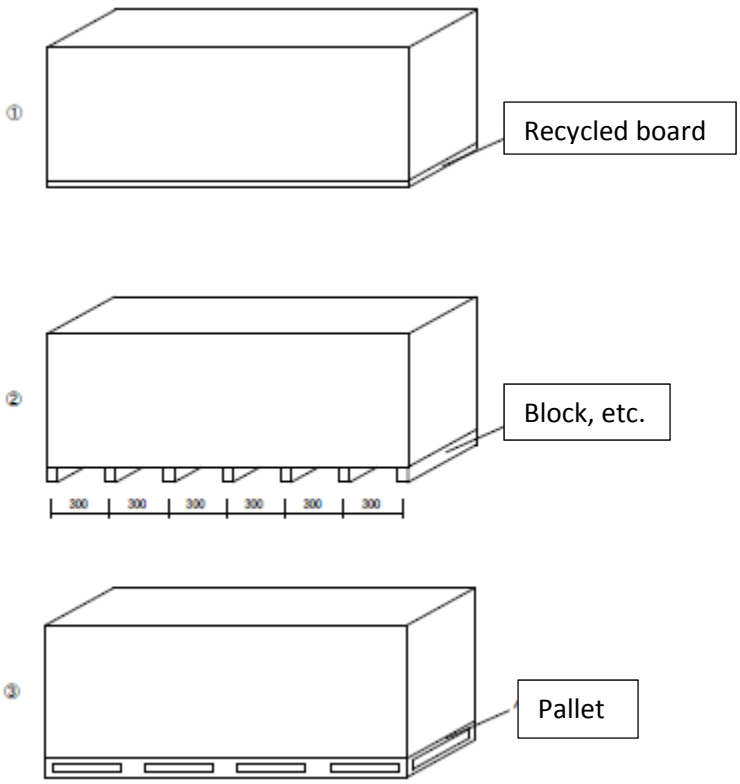

(*In case of long boards, (1) or (3) shall be implemented)

6) When 2 stacks are piled up, blocks of first and second layer stack shall be aligned.

7) Do not use reinforced gypsum boards, etc. as stepping-stool.

3.5 Disposal of remaining materials, cleaning

Remaining reinforced gypsum boards and other remaining materials shall be collected at designated places on each floor and the places shall be cleaned every day.

4. Materials

4.1 Major component

4.1.1 Reinforced gypsum board (GB-F)

Product name: Tiger Board Type Z (hereinafter referred to as TBZ)

1) Specification Non-combustible NM-8615, JIS A 6901
2) Dimension
   Thickness 15 mm
   Size (standard) 910 mm x 1,820, 2,420, 2,730 mm
3) Performance
   Specific gravity 0.75 or more
   Moisture content 3 % or less

4.1.2 Top and bottom runner

JIS G 3302 or JIS G 3313, etc.

⊏⁻45 to 1,000 x 30 to 75 x 0.4 mm or more

4.1.3 Stud

JIS G 3302 or JIS G 3313, etc.

⊏⁻45 to 1,000 x 45 to 75 x 0.4 mm or more

□ - 45 to 1,000 x 40 to 50 x 0.4 mm or more

Selection sample of wall heights and studs (when using JIS A 6517 studs and bracing)

Wall height up to 2.7 m : ⊏⁻ 50 x 45 x 0.8 mm

Wall height up to 4.0 m : ⊏⁻ 65 x 45 x 0.8 mm or ⊏⁻ 75 x 45 x 0.8 mm

Wall height up to 4.5 m : ⊏⁻ 90 x 45 x 0.8 mm

Wall height up to 5.0 m : ⊏⁻100 x 45 x 0.8 mm

4.1.4 Bracing (use the followings when providing as necessary)

JIS G 3302 or JIS G 3313, etc.

⊏⁻19 to 25 x 10 x 0.9 mm or more

4.1.5 Glass wool, etc. (use the followings when inserting as necessary)

Glass wool: JIS A 6301, JIS A 9504 or JIS A 9521

Density 10 kg/m^3 or more, Thickness 12 mm or more

Rock wool: JIS A 6301, JIS A 9504 or JIS A 9521

Density 10 kg/m^3 or more, Thickness 25 mm or more

4.2 Sub-constituent material

4.2.1 Fixing pin for runner

Concrete nail: Ø 2.0 mm or more x 10 mm or more

Buffer pin: Ø 2.0 mm or more x 10 mm or more

And other anchor piece for fixing, etc.

4.2.2 Stud spacer

Board of 0.5 mm or more thick specified by JIS G 3302 or 3313, etc.

4.2.3 Tapping screw, staple, etc.

1) Tapping screw that is treated rust prevention

Ø 3.5 mm or more x 25 mm or more

2) Staple that is treated rust prevention

Staple for fixing top layer TBZ 4 mm or more (W) x 25 mm or more (L)

Staple for fixing glass wool, etc. 4 mm or more (W) x 16 mm or more (L), etc.

(Spindle pin (25 mm or more in length) is also acceptable for fixing glass wool, etc.)

4.2.4 Adhesive

Inorganic adhesive “Tiger Tora Board” (made by Yoshino Gypsum Board Co., Ltd.) or vinyl acetate resin adhesive “Yoshino Sakubi Bonding”, etc.

4.2.5 Materials for joint finishes, etc. (use the followings when providing joint finishes as necessary)

1) Joint compound (putty)
   “Tiger U Light”, “Tiger F Light”, “Tiger SP Light”, “Tiger Light”, “Tiger V Seal Putty”, “Tiger GL Putty”, “Tiger UP Putty”, “Tiger F Top Putty”, “Tiger SP Putty”, “Tiger Putty”, “Tiger Joint Cement” (made by Yoshino Gypsum Board Co., Ltd.), etc.
2) Joint tape
   “Tiger Joint Tape”, “Tiger G Fiber Tape”, etc.

4.2.6 Filling material

1) Fire resistant joint filler
   Rock wool “Tiger Rock Felt” (10 mm thick x 15 mm wide x 1,000mm long), etc.
2) Inorganic Filling material
   “Tiger Gyptight”, “Tiger Gypseal” (made by Yoshino Gypsum Co., Ltd.), etc.
3) Sealant
   Urethane system “Tiger U Tight”, modified silicone-based “Tiger Fire Resistant Sealant”, etc.

5. Working instruction

5.1 Standard construction procedure

Mark a location of wall

↓

Provide runners

↓

Position studs

↓

Provide bracing (only when providing as necessary)

↓

Side A, fill up runner joints interface with fire resistant joint filler “Tiger Rock Felt”

↓

Side A, provide underlayer boards

↓

Side A, provide top layer boards

↓

Side A, fill up joints interfaces of top layer boards (“Tiger Gpytight” or “Tiger U Tight”)

↓

Provide glass wool, etc. from B side (only when inserting as necessary)

↓

Side B, fill up runner joints interface with fire resistant joint filer “Tiger Rock Felt”

↓

Side B, provide underlayer boards

↓

Side B, provide top layer boards

↓

Side B, fill up top layer board joint interface (Tiger Gyptight” or “Tiger U Tight”)

↓

Inspection

↓

Joint and other finishes (These finishes are not essential for getting authorization for fire resistance.)

↓

Finish (This is not essential for getting authorization of fire resistance.)

↓

Inspection

↓

Delivery

5.2 Working instruction

5.2.1 Mark

1) If a marking surface has sand, other dirt or unevenness, clean well in advance then mark.
2) Mark a center line of given partition wall from a center line or offset line of frame of the building and mark an end line of provided runner on top and bottom slab surfaces.
3) At a part where a partition is long, be careful for especially straightness.
4) After completing marking and checking locations of the marks, get approval from a supervisor of the prime contractor for construction.

5.2.2 Provide runners

1) Fix top and bottom runners to accurately marked slab surface, etc. with fixing pins, etc.
2) Insert a fixing pin at around 50mm from the end parts of runners and fix middle parts at intervals not exceeding 900 mm.
3) When providing top runner to steel beam having fire resistant coating, prior to fire resistant coating construction, fix a runner-receiving piece material by welding, etc., provide top runner and provide fire resistant coating to steel.

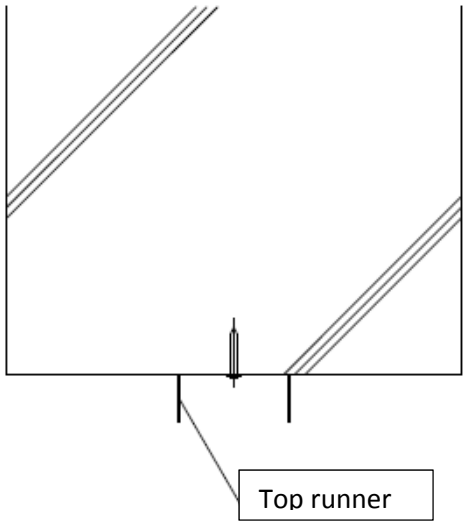

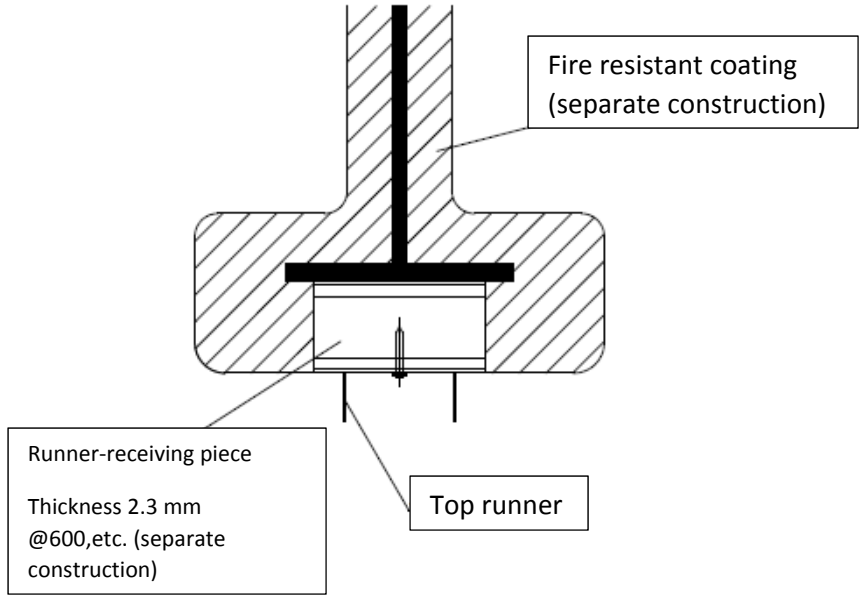

<Providing of runner to ceiling slab and RC> <Providing of runner to steel beam>

4) Top and bottom runners shall not be contacted but put around 10 mm of distance from wall or pillar, etc.

5.2.3 Position studs

1) Cut a stud a little (around 10 mm) shorter than internal height of top and bottom runner. Choose a shape of stud according to wall height.
2) Provide a stud at intervals not exceeding 606 mm (the standard is 455 mm).
3) Provide bracing at intervals of around 1,200 mm as necessary.
4) Provide stud spacer at intervals not exceeding 600 mm.

5.2.4 Fill up with fire resistant joint filler

1) Provide “Tiger Rock Felt” (10 mm thick x 15 mm wide x 1,000 mm long) to joints interface like under slab, under beam, wall, and floor before underlaying TBZ.
2) Provide “Tiger Rock Felt” to frame surface of the building and make sure that no gap between joints is created.

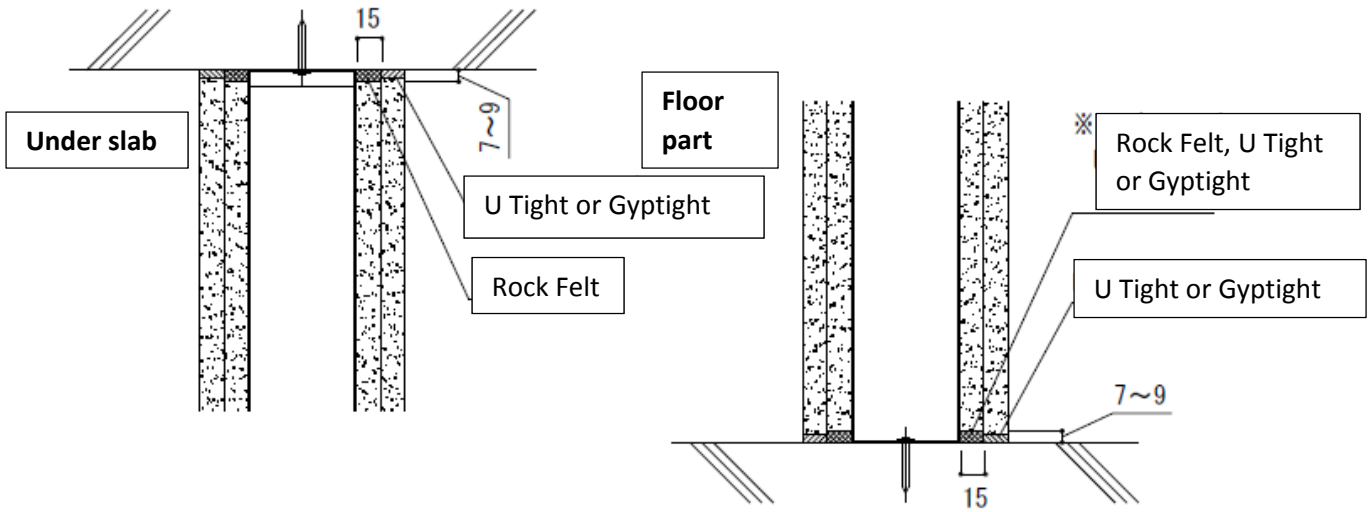

*When “Tiger U Tight” is used for underlaying for floor part, make sure to use “Tiger Gyptight” for overlaying.

5.2.5 Provide underlayer TBZ

1) Provide TBZ horizontally or vertically in a manner to minimize loss.
2) Fix TBZ on stud with tapping screws while lightly pushing “Tiger Rock Felt” laid under slab, beam, or on wall, or floor. When fixing, be careful not to create a gap with “Tiger Rock Felt”. When “Tiger Rock Felt” was not used for floor parts, create a gap of approximately 5mm between TBZ and floor slab, then fix it. Fill up the gapped part with “Tiger Gyptight” or “Tiger U Tight”, etc. until the gap is eliminated. However, when not using “Tiger Gyptight” at <5.2.7 Process joints interface> at a time of providing a top layer, make sure to use “Tiger Gyptight” in the gapped part for underlaying.
3) While adjusting TBZ not to make roughness at parts contacted to studs, fix it with tapping screws at intervals not exceeding 200 mm. Indent a screw head a little deeper than TBZ surface. If a tapping screw is located too close to the end parts of TBZ, TBZ may get chipped and the edge may get damaged so be careful.
4) TBZs shall be butted each other not to make a gap at joint parts.

5.2.6 Provide top layer TBZ

1) TBZ shall be provided vertically in principle and lay out not to overlap underlayer TBZ with joints.
2) Adjust TBZ at joint parts with concrete wall, etc. so that gapped parts become 5 mm or less.
3) Temporarily fix TBZ by spotting 150 g/m^2 or more of inorganic adhesive “Tiger Tora Bonding” or vinyl acetate resin adhesive “Yoshino Sakubi Bonding”, etc. then fix TBZ with staples. An interval of staples shall be within 200 mm and 1 staple or more shall be used at 1 place.
4) When providing TBZ inside a staircase or elevator shaft, consider wind pressure and earthquake and fix it on stud with tapping screws of minimal Ø3.5 mm x minimal 40 mm at intervals not exceeding 600 mm as necessary.

5) TBZs shall be butted each other at joint parts not to create a gap.

5.2.7 Finish joints interface

1) After completing providing top layer TBZ, fill up joints interface of wall, floor, under slab, or under beam with “Tiger Gyptight” or “Tiger U Tight”, etc. not to have a gap. However, when “Tiger U Tight” was used at underlayer joints interfaces of floor part, make sure to use “Tiger Gyptight”.
2) Fill up joints interfaces of spray fire resistant coating with “Tiger Gypseal”, etc. not to have a gap.

5.2.8 Insert glass wool, etc. (only when inserting)

1) After processing joints interfaces of one side, insert glass wool, etc. in hollow parts and fix it to underlayer TBZ with staples or spindle pins not to fall down.
2) Make a notch in parts connecting to spacer parts of studs, and insert glass wool, etc. inside stud and upper and bottom runners not to create a gap.

5.2.9 Finish joint parts (only when finishing as necessary)

Joint parts, etc. of top layer TBZ shall be finished with joint tape “Tiger Joint Tape”, “Tiger G Fiber Tape” and joint compound (putty) “Tiger U Light”, “Tiger F Light”, “Tiger SP Light”, “Tiger Light”, “Tiger V Seal Putty”, “Tiger GL Putty”, “Tiger UP Putty”, “Tiger F Top Putty”, “Tiger SP Putty”, “Tiger Putty”, “Tiger Joint Cement”, etc.

5.2.10 Finish (only when finishing as necessary)

Finish by painting, pasting wall materials, spraying, etc.

5.2.11 Notes of other design, construction

1) This Standard Construction Instruction specifies materials that Yoshino recommends among the Accreditation.
2) When providing foamed heat insulator to an external wall or under slab of top floor, provide this wall structure before heat insulating construction.
3) When providing this wall structure under RC beam, place a wall center at least around 80 mm inside from the beam edge, or embed anchor pieces for fixing top runner, etc. so as to prevent top runner fixing pins from losing retaining capability.
4) When welding parts such as runner-receiving pieces to steel beams, take care not to damage steel base materials.
5) When this wall structure crosses at right angles or runs in parallel under flat type deck plate, cut the lumps of deck at the left and right approximately 250 mm from the wall center so that the wall contacts the slab (refer to detailing drawing).
6) Regarding connection between hollow part of deck plate dent part and the top runner when providing top runner at deck plate, treat in the following method:
   I. Fill up hollow layer of deck plate dent with 150 kg/m^3 of rock wool until no gap. Next, paste “Tiger Gypseal” at rock wool part by pressing it down with a spatula not to make a gap. Coating “Tiger Gypseal” shall be thicker than top layer + under layer.
   II. Fill up the hollow layer of deck plate dent with 150 kg/m^3 of rock wool until no gap. At the both sides, fix one gypsum board (12.5 mm thick) on top layer surface material under deck plate with adhesive and staples, etc.

7) Since this wall structure is non-bearing partition wall structure, the method for processing the four side premises that external forces due to deformation of the building frame do not transmit partition walls and decides joints interface finishes, gapped part dimensions, etc. Deformation of the building frame like a pillar, beam and the like (including creep of floor slab) is not uniform and greatly differs depending on size of earthquakes, building structure or other factors. So, when deformations are predicted, it is necessary to take additional consideration of connection.
8) Do not provide electricity box or similar nature of any equipment to this wall structure.
9) When providing doors to this wall structure, fix openings reinforcement materials independently and directly on the building frame like floor, under slab, beam, etc. with fixing pins or by welding, etc.
10) Separate consideration should be given if a high-rise building swings due to strong winds, etc. and this wall structure needs squeak noise reduction measure.
11) The galvanized steel sheet shall be 0.11 – 2.3 mm thick when being provided between stud and underlayer material or between underlayer material and top layer material.

6. Inspection

6.1 Self inspection

Process	Item	Point	Method	Criteria	Control method
Marking	Criteria mark	Dimension	Convex	±2.0 mm	Check Inspection
Providing of runner	Fixing pin	Interval	Convex	Within 900 mm	
Providing of stud	Perpendicularity of stud	Dimension	Plumb level	±2.0 mm	
	Layout	Interval	Convex	Within 606 mm	
Providing (underlayer) of TBZ	Butting	Dislocation between both plates	Ruler	Within 2.0 mm	
	Joint	Gap	Visual check	No gap	
	Tapping screw	Interval	Scale	Within 200 mm	
Providing (top layer) of TBZ	Butting	Dislocation between both plates	Ruler	Within 1.5 mm	
	Joint	Gap	Visual check	No gap	
	Adhesive	Weight	Balance or container	150 g/m^2 or more	
	Staple	Interval	Scale	Within 200 mm	
Glass wool, etc.	Inserting	Gap	Visual check	No gap	
Wall end part	Filling	Gap	Light	No transmitted light	

6.2 Witness inspection

Implement witness inspection based on instruction of a supervisor of the prime contractor for construction.

Certificate

MLIT Notification No.3567

December 25, 2008

Dear President Mr. Eiichiro Sudo of Yoshino Gypsum Co., LTD.,

The following construction method, etc. have been recognized to comply with the provisions of the Building Standard Law, Article 2, Item 7 and the enforcement order of the same Law, Article 107, Item 2 (Partition Wall (non-bearing wall): 1 Hour Rating) based on the provision of the same Law, Article 68-26, Paragraph 1 (including cases where it is applied mutatis mutandis pursuant to Article 88, Paragraph 1 of the same Law).

Note

1. Certificate number
   FP060NP-0174

2. Name of Accredited Construction Method, etc.
   Double Sided Reinforced Gypsum Board Laminated / Light Weight Steel Substrate Partition Wall

3. Contents of Accredited Construction Method etc.
   As per attachment

(Notice) Please keep this Certificate safe.

Kazuyoshi Kaneko

Minister of Land, Infrastructure, Transport and Tourism

Certificate <Fire Resistance Structure> (Where sound absorbing materials are not inserted in hollow parts)

Certificate

MLIT Notification No.3568

December 25, 2008

Dear President Mr. Eiichiro Sudo of Yoshino Gypsum Co., LTD.,

The following construction method, etc. have been recognized to comply with the provisions of the Building Standard Law, Article 2, Item 7 and the enforcement order of the same Law, Article 107, Item 2 (Partition Wall (non-bearing wall): 1 Hour Rating) based on the provision of the same Law, Article 68-26, Paragraph 1 (including cases where it is applied mutatis mutandis pursuant to Article 88, Paragraph 1 of the same Law).

Note

1. Certificate number
   FP060NP-0175

2. Name of Accredited Construction Method, etc.
   Man-made Mineral Fiber Heat Insulator Filled / Double Sided Reinforced Gypsum Board Laminated / Light Weight Steel Substrate Partition Wall

3. Contents of Accredited Construction Method, etc.
   As per attachment

   (Notice) Please keep this Certificate safe.

Kazuyoshi Kaneko

Minister of Land, Infrastructure, Transport and Tourism

Certificate <Fire Resistance Structure> (Where sound absorbing materials are inserted in hollow parts)

Standard vertical section

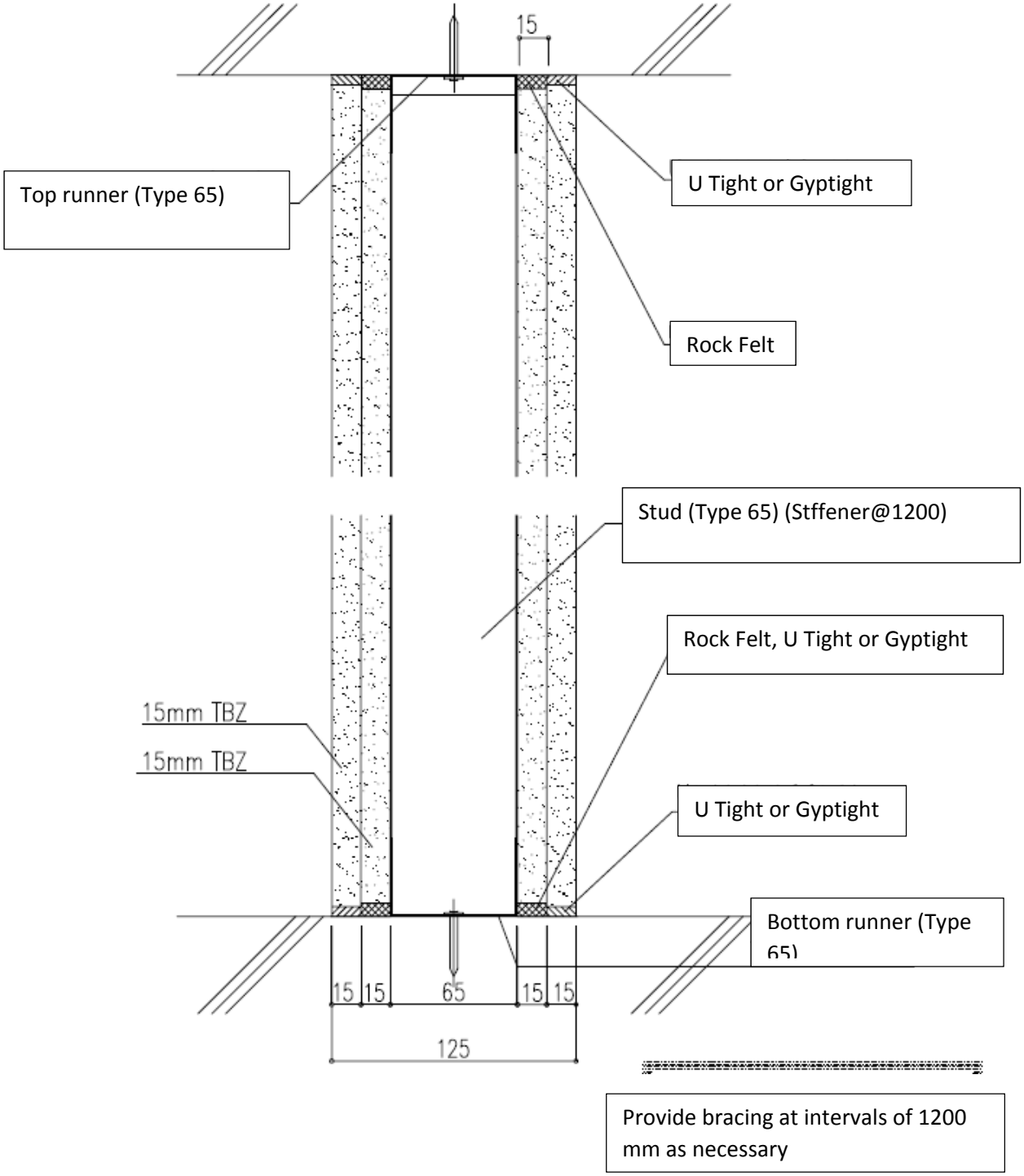

*When U Tight is used for underlaying for floor parts, make sure to use Gyptight for overlaying.

Standard horizontal section

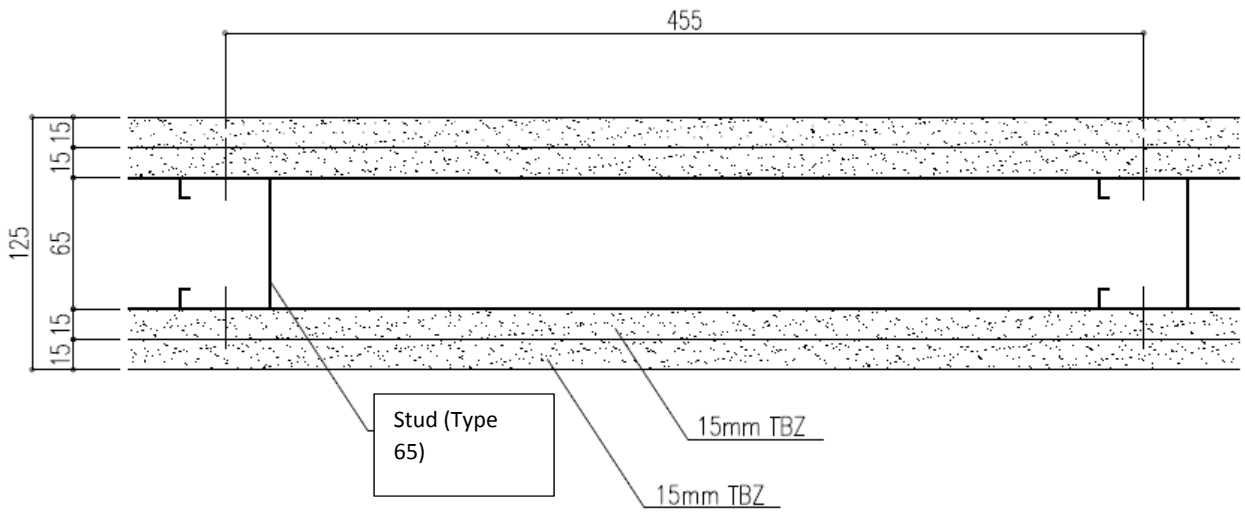

* For accreditation of fire resistance, stud interval shall be within 606 mm.

Standard stud interval shall be 455 mm.

吉野耐火システム

B15

１時間耐火構造　国土交通大臣認定　ＦＰ０６０ＮＰ－０１７４
ＦＰ０６０ＮＰ－０１７５

標準施工指導書

[平成２６年４月版]

安全で快適な住空間を創る
YOSHINO
吉野石膏株式会社
TIGER BRAND

吉野耐火システム B15
標準施工指導書

T－002－1

安全で確実に施工をしていただくために

乾式耐火遮音壁を、集合住宅（マンション等）の戸境壁等として施工する場合は“特例基準「消防法施行令２９条の４」”に基づいた総務省令第４０号、その細目を定めた消防予第１８８号および第５００号通知内容を遵守する義務があります。その第５００号通知には施工条件として、「施工管理体制が整備されている場合に限る」と明記されております。

「施工管理体制が整備されている場合に限る」とは、

① 乾式壁の施工方法―メーカーが作成した施工仕様書等により明確とされていること。

② 施工現場における指導・監督等―メーカーが実施する技術研修を修了した者が選任されていること。

③ 施工状況の確認等―自主検査による確認が行われ、かつその結果が保存されていること。

の要件が整っていることです。

「標準施工指導書」が①にあたるものとなります。

②につきましては、「耐火・遮音システムの施工管理」を徹底するため、《タイガー耐火遮音構造施工研究会》またはそれに準ずる組織で、現場施工を想定した実技研修などの技術研修を実施し、研修修了者には修了証〈ライセンス〉を授与する制度を確立しております。

上記は、施工現場で乾式戸境壁の耐火性能を確保するために施工管理体制を整備することを目的としており、この考え方は戸境壁以外の耐火壁を施工する際にも必要であることから、この「標準施工指導書」の内容に従い確実に施工することとします。

その他

1．この「標準施工指導書」は、必ず施工前に注意深く読み、よく理解してください。

2．この「標準施工指導書」はこの施工全般にわたって、いつでも確認できるように保管して置いてください。

吉野耐火システム B15
標準施工指導書

T－002－2

目　次

１．総　則
　１－１　適用範囲
　１－２　周知徹底
　１－３　施　　工
　１－４　報　　告

２．安全対策

３．ボードの荷姿、運搬、揚重、保管
　３－１　荷　　姿
　３－２　運　　搬
　３－３　揚　　重
　３－４　保　　管
　３－５　残材処理　清掃

４．材　料
　４－１　主構成材料
　４－２　副構成材料

５．施工要領
　５－１　標準施工手順
　５－２　施工要領

６．検　査
　６－１　自主検査
　６－２　立合い検査

７．認定書
　　耐火構造

８．各部の納まり例

[平成２６年４月版]

吉野耐火システム B15
標準施工指導書

T－002－3

① 総 則

１－１　適用範囲

この標準施工指導書は、吉野耐火システム Ｂ１５について適用する。

吉野耐火システム Ｂ１５
１時間耐火構造　国土交通大臣認定　ＦＰ０６０ＮＰ－０１７４（中空部に吸音材を挿入しない場合）
ＦＰ０６０ＮＰ－０１７５（中空部に吸音材を挿入する場合）

水平断面図　（中空部に吸音材を挿入しない場合の認定の仕様）

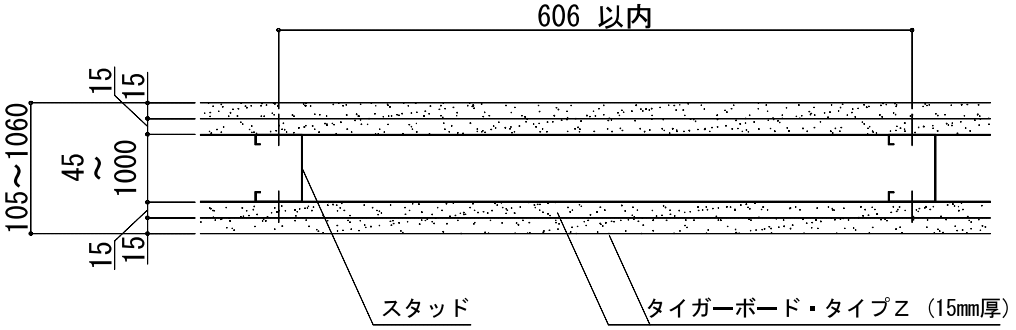

※標準のスタッド間隔は４５５㎜とする。
※壁高さに応じて選択されるスタッドの形状（４５形、５０形、６５形、７５形、９０形または１００形など）は異なります。
※本書の図面寸法値は各部材の公称寸法を記載しております。

１－２　周知徹底

吉野耐火システム Ｂ１５の施工に際しては、この標準施工指導書にて、事前に説明会、その他の方法で、作業員全員に周知徹底を図る。

１－３　施工

施工業者は、この標準施工指導書によって、正確、確実に施工しなければならない。
この標準施工指導書に明記されていない事項、または疑義が生じた場合は、吉野石膏（株）と協議し、施工方法を検討する。

１－４　報告

施工業者は、工事が完了した時点で建設元請業者の監督員に報告し、検査を受ける。

② 安全対策

現場の作業は、安全を第一とし、各人が各々自覚した行動をとり、もし危険のある段取りや安全管理が徹底出来ない場合は、作業を中止してでも全員一体となって、安全管理を最優先し、最後まで無事故で工事を完了させることを基本とする。

《タイガーボード類の注意》
＊指定の用途以外にご使用の場合は性能を保証いたしかねます。
＊ボードを施工する際の切断作業では集塵などに留意し、防塵カッターや集塵丸鋸を使用してください。
また、サンディングなどの作業で発生する粉塵に対しては、防塵マスクや安全メガネの着用をおすすめします。
＊在庫の際、積層段数が多いと荷くずれの危険があります。
＊タイガーボード類の廃材、洗浄排水の処理については、環境公害とならないようにご注意ください。

③ ボードの荷姿、運搬、揚重、保管

３－１ 荷姿
保管荷姿は、通常強化せっこうボード（１５㎜)で８０枚を１山としてある。

３－２ 運搬
強化せっこうボードなどの搬入は、建設元請業者の監督員との打ち合わせにより、現場の搬入計画にもとづいて行う。

３－３ 揚重
各階への揚重は、現場設置のリフトなどで行い、現場の揚重基準に従う。

３－４ 保管
（1）荷くずれ、角欠けがないように均等に置く。
（2）壁際より、最低１m以上離す。
（3）傾斜面、墨出し部には置かない。
（4）凸凹面や水漏れ部には置かない。上階から漏水の恐れがある場合は、あらかじめシートなどで養生する。

（5）強化せっこうボードなどの保管は、波打ち、そりがでないように下図のように、高さのそろった台上に保管し、ボードの縁が台からはみ出ないこと。また、各山の一番上のボードは裏面を上面とすること。

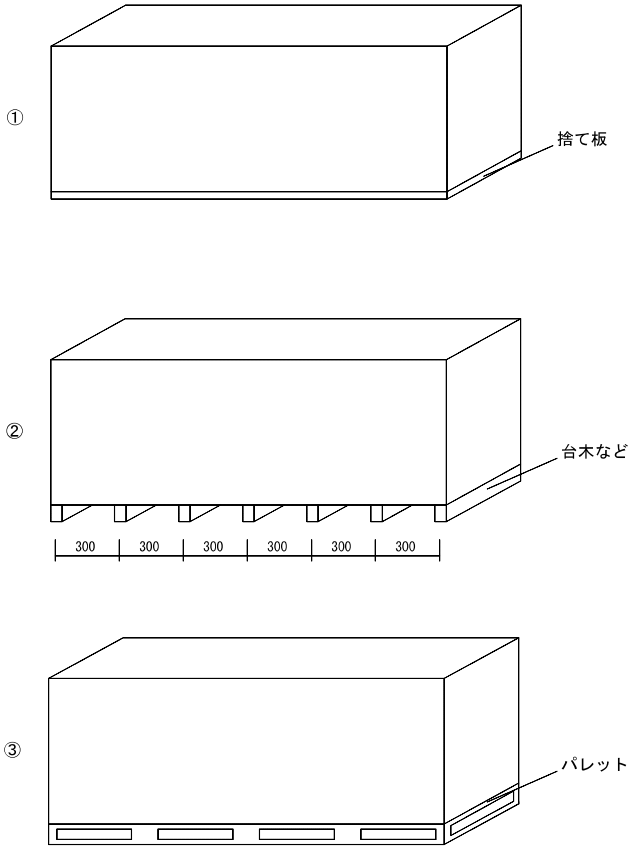

（※長尺品の場合は①または③とする）

（6）２段積みなどを行う場合は、台木の位置を１段目と２段目でそろえること。
（7）強化せっこうボードなどを踏み台にしないこと。

３－５　残材処理、清掃

強化せっこうボード、その他の残材は、各階ごとにあらかじめ決められている指定場所に毎日清掃し、集積しておく。

④ 材 料

４－１　主構成材料

４－１－１　強化せっこうボード(ＧＢ－Ｆ)

商品名：タイガーボード ・タイプＺ　（ 以下ＴＢＺと称する ）

（1） 規格　不燃NM－８６１５、ＪＩＳ Ａ ６９０１

（2） 寸法

厚　さ　　１５㎜

大きさ(標準)　９１０㎜×１，８２０，２，４２０，２，７３０㎜

（3） 性能

比　重　　０．７５以上

含水率　　３％以下

４－１－２　上部および下部ランナー

ＪＩＳ Ｇ ３３０２またはＪＩＳ Ｇ ３３１３等

⊏－４５～１，０００×３０～７５×０．４㎜以上

４－１－３　スタッド（間柱）

ＪＩＳ Ｇ ３３０２またはＪＩＳＧ ３３１３等

⊏－４５～１，０００×４５～７５×０．４㎜以上

□－４５～１，０００×４０～５０×０．４㎜以上

壁高さと間柱の選定例（ＪＩＳ Ａ ６５１７のスタッドと振れ止めを使用した場合）

壁高さ２．７ｍまで　：　⊏－　５０×４５×０．８㎜

壁高さ４．０ｍまで　：　⊏－　６５×４５×０．８㎜または⊏－７５×４５×０．８㎜

壁高さ４．５ｍまで　：　⊏－　９０×４５×０．８㎜

壁高さ５．０ｍまで　：　⊏－１００×４５×０．８㎜

４－１－４　振れ止め（必要に応じて取り付ける場合には下記のものを使用する）

ＪＩＳ Ｇ ３３０２またはＪＩＳ Ｇ ３３１３等

⊏－１９～２５×１０×０．９㎜以上

４－１－５　グラスウールなど（必要に応じて挿入する場合には下記のものを使用する）

グラスウール：ＪＩＳ Ａ ６３０１、ＪＩＳ Ａ ９５０４またはＪＩＳ Ａ ９５２１

密度１０kg/m³ 以上　厚さ１２㎜以上

ロックウール：ＪＩＳ Ａ ６３０１、ＪＩＳ Ａ ９５０４またはＪＩＳ Ａ ９５２１

密度１０kg/m³ 以上　厚さ２５㎜以上

４－２　副構成材料

４－２－１　ランナー固定用ピン

コンクリート釘：φ２．０㎜以上×１０㎜以上
バッファーピン：φ２．０㎜以上×１０㎜以上
その他固定用アンカーピースなど

４－２－２　スタッドスペーサー

ＪＩＳ Ｇ ３３０２またはＪＩＳ Ｇ ３３１３等に規定する板厚０．５㎜以上のもの。

４－２－３　タッピンねじ・ステープルなど

（１）タッピンねじ：防錆処理をしたもの。
φ３．５㎜以上×２５㎜以上
（２）ステープル：防錆処理をしたもの。
上張りＴＢＺの留め付け用ステープル　　幅４㎜以上×長さ２５㎜以上
グラスウールなどの留め付け用ステープル　　幅４㎜以上×長さ１６㎜以上など
（グラスウールなどの留め付け用にはスピンドルピン（長さ２５㎜以上）も使用可能）

４－２－４　接着材

無機質系接着材「タイガートラボンド」（吉野石膏製）または酢酸ビニル樹脂系接着材「吉野サクビボンド」など

４－２－５　継目処理などの材料（必要に応じて継目処理をする場合には下記のものを使用する）

（１）ジョイントコンパウンド（パテ）
「タイガーUライト」、「タイガーＦライト」、「タイガーＳＰライト」、「タイガーライト」、「タイガーVシールパテ」、「タイガーＧＬパテ」、「タイガーＵＰパテ」、「タイガーＦトップパテ」、「タイガーＳＰパテ」、「タイガーパテ」、「タイガージョイントセメント」（吉野石膏製）など
（２）ジョイントテープ
「タイガージョイントテープ」、「タイガーGファイバーテープ」など

４－２－６　充てん材

（１）耐火目地材
ロックウール　「タイガーロックフェルト」（厚さ１０㎜×幅１５㎜×長さ１，０００㎜）など
（２）無機質系充てん材
「タイガージプタイト」、「タイガージプシール」（吉野石膏製）など
（３）シーリング材
ウレタン系「タイガーUタイト」、変成シリコーン系「タイガー耐火シーラント」など

⑤ 施工要領

５－１ 標準施工手順

墨　　出　　し
↓
ラ ン ナ ー の 取り 付 け
↓
ス タ ッ ド 建 て 込 み
↓
振れ止めの取り付け（必要に応じて取り付ける場合に限る）
↓
A面　ランナー取合部の耐火目地材「タイガーロックフェルト」を充てん
↓
A面　下張りボード張り付け
↓
A面　上張りボード張り付け
↓
A面　上張りボード取合部の充てん（「タイガージプタイト」または「タイガーUタイト」）
↓
B面よりグラスウールなどの取り付け（必要に応じて挿入する場合に限る）
↓
B面　ランナー取合部の耐火目地材「タイガーロックフェルト」の充てん
↓
B面　下張りボード張り付け
↓
B面　上張りボード張り付け
↓
B面　上張りボード取合部の充てん（「タイガージプタイト」または「タイガーUタイト」）
↓
検　　査
↓
継 目 部 そ の 他 の 処 理（耐火認定上必須の処理ではありません）
↓
仕　上　げ　（耐火認定上必須の処理ではありません）
↓
検　　査
↓
引　き　渡　し

５－２　施工要領

５－２－１　墨出し

（１）墨打ち面に砂その他の汚れや凹凸がある場合は、事前によく清掃してから墨出しをする。

（２）躯体の芯墨、または返り墨から所定の間仕切壁の芯墨を出し、取り付けランナーの面墨を上、下スラブ面に出す。

（３）間仕切の長さが長いところでは、直線度に特に注意する。

（４）墨出し終了後、墨出し位置をチェックした後、建築元請業者の監督員の承認を受ける。

５－２－２　ランナーの取り付け

（１）上部および下部ランナーは、正確に墨出しされたスラブ面などに固定用ピンなどで固定する。

（２）固定用ピンは、ランナーの端部より約５０㎜の位置に打ち、中間部は９００㎜以内の間隔で固定する。

（３）耐火被覆される鉄骨梁に上部ランナーを取り付ける場合は、耐火被覆工事に先立ってランナー受けのピース材を溶接などにより固定し、上部ランナーを取り付け、鉄骨の耐火被覆を施工する。

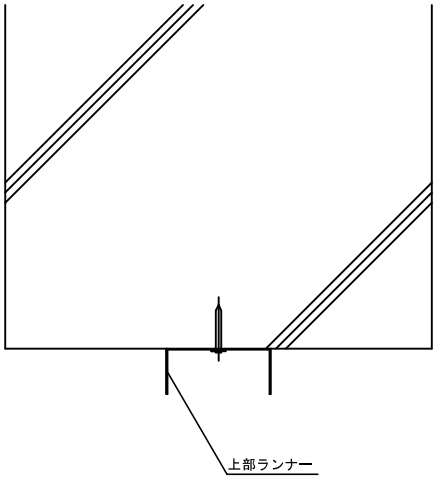

＜天井スラブおよびＲＣへのランナー取り付け＞

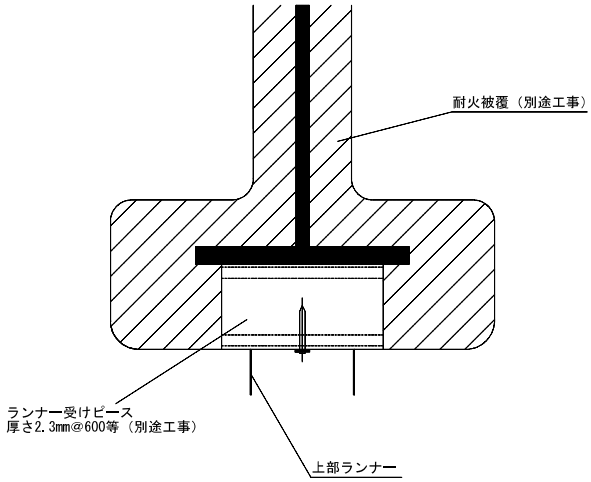

＜鉄骨梁へのランナーの取り付け＞

（４）上部および下部ランナーは、壁または柱などへは突き付けずに約１０㎜離す。

５－２－３　スタッドの建込み

（１）スタッドは上部および下部ランナーの内法高さ寸法より少し短く切断(約１０㎜)する。スタッドの形状は、壁高に応じて選定する。

（２）スタッドは、６０６㎜以内の間隔で取り付ける（標準は、４５５㎜)。

（３）振れ止めは、必要に応じて約１，２００㎜の間隔で取り付ける。

（４）スタッドスペーサーは、６００㎜以内の間隔で取り付ける。

５－２－４　耐火目地材の充てん

（１）ＴＢＺを下張りする前に、スラブ下、梁下、壁、床などの取合部に「タイガーロックフェルト」（厚１０㎜×幅１５㎜×長さ１，０００㎜）を張り付ける。

（２）「タイガーロックフェルト」は躯体面に取り付け、つなぎ目の部分にすき間が生じないように十分注意する。

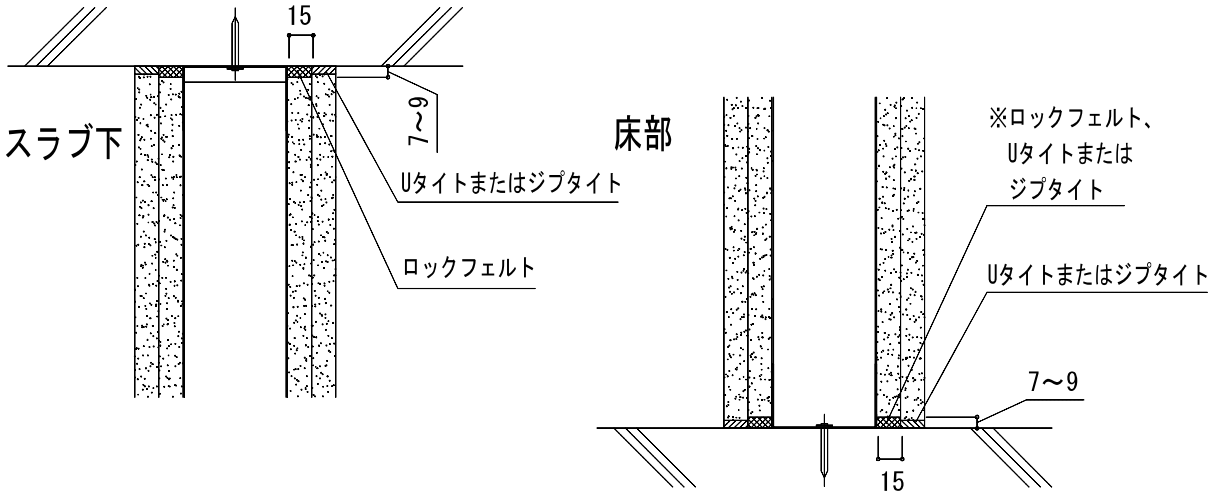

※床部の下張りに「タイガーUタイト」を使用した場合は、上張りに、必ず「タイガージプタイト」を使用する。

５－２－５　下張りＴＢＺの張り付け

（１）ＴＢＺは横張りまたは縦張りとし、出来るだけロスが少なくなるように割り付ける。

（２）ＴＢＺは、スラブ下、梁下、壁、床などに張り付けてある「タイガーロックフェルト」を軽く押しつぶすようにしながらスタッドにタッピンねじで留め付ける。留め付けの際、「タイガーロックフェルト」の間にすき間が生じないように十分注意する。
床部に「タイガーロックフェルト」を使用しなかった場合は、ＴＢＺと床スラブの間に５㎜程度の目透かしを設けて留め付ける。目透かし部に「タイガージプタイト」または「タイガーUタイト」等をすき間が残らないように充てんする。ただし、上張り張り付け時の＜５－２－７取合部の処理＞において「タイガージプタイト」を使用しない場合は必ず下張りに目透かし部には「タイガージプタイト」を使用する。

（３）ＴＢＺはスタッドと接した部分に不陸が生じないように調整しながら、タッピンねじで２００㎜ 以内の間隔で留め付ける。ねじ頭は、ＴＢＺ表面より軽く凹ませる。タッピンねじの位置がＴＢＺの端部にあり過ぎると、ＴＢＺの端欠けにより縁が破損するので注意する。

（４）ＴＢＺ同士の目地部は、すき間のないように互いに突き付け張りとする。

５－２－６　上張りＴＢＺの張り付け

（１）ＴＢＺは原則として縦張りとし、下張りのＴＢＺと目地が重ならないように割り付ける。

（２）ＴＢＺは、コンクリート壁などとの接合部は、５㎜以内の目透かしとなるように調整する。

（３）ＴＢＺの留め付けは、無機質系接着材「タイガートラボンド」または酢酸ビニル樹脂系接着材「吉野サクビボンド」などを１５０g/㎡以上点付けし、ステープルで留め付ける。ステープルの間隔は、２００㎜以内で１箇所あたり１本以上とする。

（4）階段室やエレベーターシャフト内側にＴＢＺを張る場合は、風圧や地震を考慮し、必要に応じてφ３．５㎜以上×４０㎜以上のタッピンねじでスタッドに約６００㎜以内の間隔で留め付ける。
（5）ＴＢＺ同士の目地部は、すき間のないように互いに突き付け張りとする。

５－２－７　取合部の処理
（1）上張りＴＢＺの張り付け終了後、スラブ下、梁下、壁、床などの取合部は、「タイガージプタイト」または「タイガーUタイト」などですき間のないように充てんする。ただし、床部の下張り取合部に「タイガーUタイト」を使用した場合には、必ず「タイガージプタイト」を使用する。
（2）吹付け耐火被覆との取合部は「タイガージプシール」などですき間のないよう充てんする。

５－２－８　グラスウールなどの挿入（挿入する場合に限る）
（1）片面の取合部の処理後、中空部にグラスウールなどを挿入し、下張りＴＢＺにステープルまたはスピンドルピンでズレ落ちないように留め付ける。
（2）グラスウールなどはスタッドのスペーサー部に接する部分に切り込みをいれ、スタッド内および上下ランナー内に差し込むようにしてすき間の出ないように充てんする。

５－２－９　継目部の処理（必要に応じて処理する場合に限る）
上張りＴＢＺの継目部等は、ジョイントテープ「タイガージョイントテープ」、「タイガーGファイバーテープ」とジョイントコンパウンド（パテ）「タイガーUライト」、「タイガーFライト」、「タイガーＳＰライト」、「タイガーライト」、「タイガーVシールパテ」、「タイガーＧＬパテ」、「タイガーＵＰパテ」、「タイガーFトップパテ」、「タイガーＳＰパテ」、「タイガーパテ」、「タイガージョイントセメント」などを用いて仕上げる。

５－２－１０　仕上げ（必要に応じて処理する場合に限る）
ペイント、壁装材貼り、吹付けなどで仕上げる。

５－２－１１　その他設計、施工上の留意点
（1）この標準施工指導書は、認定書の中から当社が推奨する材料を明記してあります。
（2）外壁や最上階スラブ下などに発泡系断熱材を施工する場合は断熱工事に先立って当壁構造を施工する。
（3）ＲＣ梁下に当壁構造を設ける場合は、上部ランナー留め付けピンの保持力が低下しないように、壁の芯が梁際から８０㎜程度以上内側にくるように配置するか、上部ランナー固定用アンカーピースなどを埋込みとする。
（4）ランナー受けピースなどを鉄骨梁に溶接する場合は、鉄骨母材を傷めないように配慮してください。
（5）フラット型デッキプレート下に当壁構造が直交、平行にくる場合、壁芯の左右２５０㎜程度に当たるデッキの山はカットし、壁がスラブまで当たるようにする。（納まり図参照）
（6）デッキプレートに上部ランナーを取り付けた場合のデッキプレート凹部の中空層と上部ランナーとの納まりについては以下の方法で処理をする。
① デッキプレート凹部の中空層にロックウール１５０㎏／m^3をすき間なく充てんする。次にロックウール部分に「タイガージプシール」をへらなどで押しつけながらすき間なく塗り付ける。「タイガージプシール」の塗り厚は、上張り＋下張りの厚さ以上とする。
② デッキプレート凹部の中空層にロックウール１５０㎏／m^3をすき間なく充てんする。その両側には１２．５㎜厚せっこうボード１枚をデッキプレート下の上張り面材に接着材とステープルなどで留め付ける。

（７）当壁構造は非耐力間仕切壁構造のため、その四周処理法は躯体の変形等による外力が間仕切壁に伝わらないことを前提として取合部処理、目透かし寸法などを決めております。柱、梁などの躯体の変形（床スラブのクリープ含む）は一様ではなく、地震の大きさや建物の構造、またはその他の要因により大きく異なりますので、変形が予想される場合には別途、納まりをご検討ください。

（８）当壁構造に電気ボックス類は、取り付けない。

（９）当壁構造にドアを取り付ける場合は、開口部補強材を独立して、床、スラブ下、梁などの躯体に直接固定用ピンまたは溶接などにより固定する。

（１０）高層建築物が強風等により揺れて、当壁構造にきしみ音低減対策が必要な場合は、別途ご検討ください。

（１１）亜鉛めっき鋼板等は、スタッドと下張り材または下張り材と上張り材との間に取付ける場合は、厚さ０．１１～２．３㎜とする。

⑥ 検 査

６－１　自主検査

工　程	項　目	要　点	方　法	基　　準	管理方式
墨　出　し	基準墨	寸　法	コンベックス	±２．０㎜	チェック検査
ランナー取り付け	固定用ピン	間　隔	コンベックス	９００㎜以内	
間柱取り付け	間柱の垂直度	寸　法	下げ振り水準器	±２．０㎜	
	割り付け	間　隔	コンベックス	６０６㎜以内	
ＴＢＺ取り付け(下張り)	突き付け	目違い	定　規	２．０㎜以内	
	目　地	すき間	目　視	すき間がないこと	
	タッピンねじ	間　隔	スケール	２００㎜以内	
ＴＢＺ取り付け(上張り)	突き付け	目違い	定　規	１．５㎜以内	
	目　地	すき間	目　視	すき間がないこと	
	接着材	重　量	秤または容器	１５０g/㎡以上	
	ステープル	間　隔	スケール	２００㎜以内	
グラスウールなど	挿　入	すき間	目　視	すき間がないこと	
壁　端　部	充てん	すき間	ライト	透過光のないこと	

６－２　立合検査

立合検査は、建設元請業者の監督員の指示に基づいて行う。

認　定　書

国住指第 3567 号
平成 20 年 12 月 25 日

吉野石膏株式会社
代表取締役社長　須藤 永一郎　様

国土交通大臣　　金子　一義

下記の構造方法等については、建築基準法第 68 条の 26 第 1 項（同法第 88 条第 1 項において準用する場合を含む。）の規定に基づき、同法第 2 条第七号及び同法施行令第 107 条第二号（間仕切壁（非耐力壁）：1 時間）の規定に適合するものであることを認める。

記

1. 認定番号
   FP060NP-0174

2. 認定をした構造方法等の名称
   両面強化せっこうボード重張／軽量鉄骨下地間仕切壁

3. 認定をした構造方法等の内容
   別添の通り

（注意）この認定書は、大切に保存しておいてください。

認　定　書

国住指第 3568 号
平成 20 年 12 月 25 日

吉野石膏株式会社
代表取締役社長　須藤 永一郎　様

国土交通大臣　　金子　一義

下記の構造方法等については、建築基準法第 68 条の 26 第 1 項（同法第 88 条第 1 項において準用する場合を含む。）の規定に基づき、同法第 2 条第七号及び同法施行令第 107 条第二号（間仕切壁（非耐力壁）：1 時間）の規定に適合するものであることを認める。

記

1. 認定番号
   FP060NP-0175

2. 認定をした構造方法等の名称
   人造鉱物繊維断熱材充てん／両面強化せっこうボード重張／軽量鉄骨下地間仕切壁

3. 認定をした構造方法等の内容
   別添の通り

（注意）この認定書は、大切に保存しておいてください。

標準垂直断面図

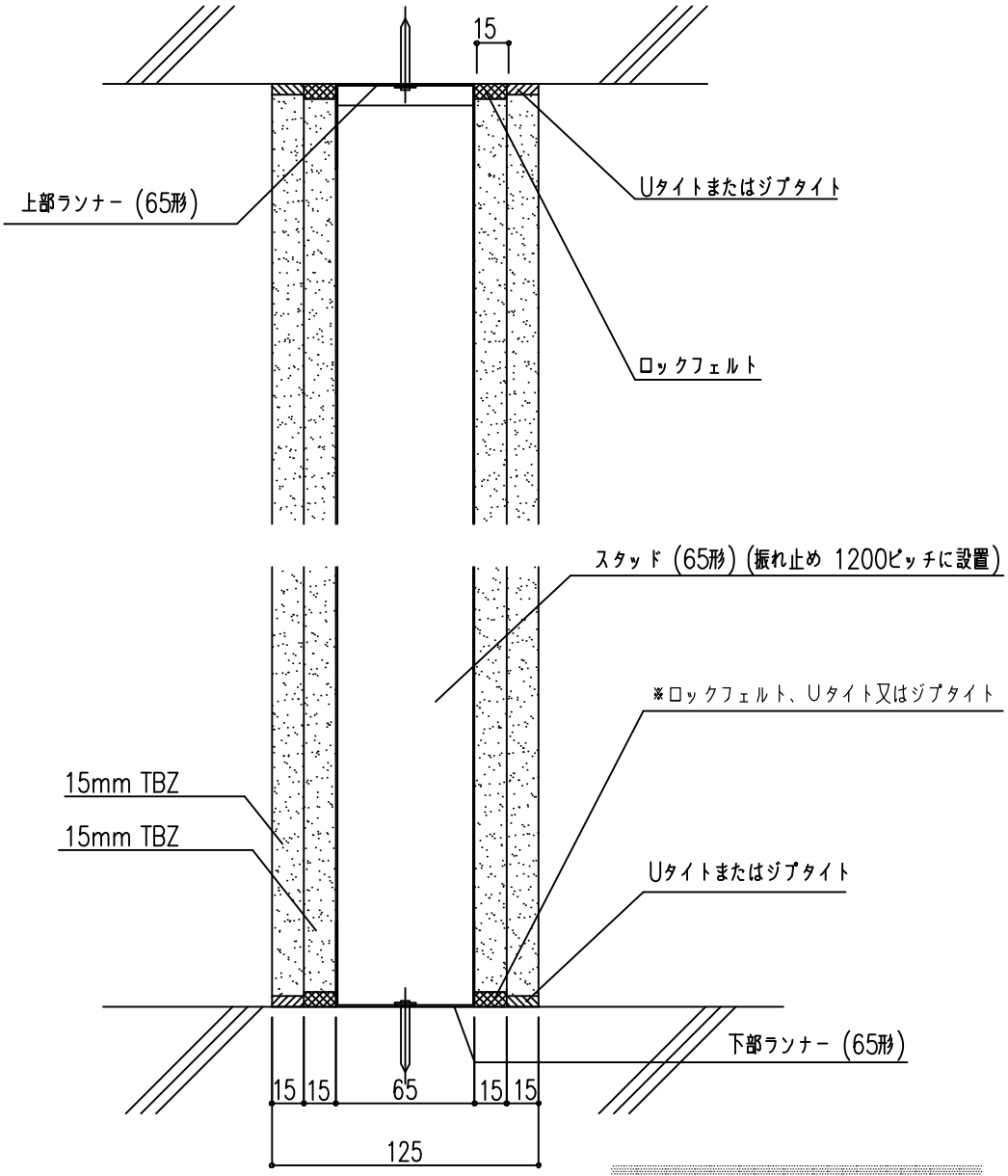

振れ止めは必要に応じて
1200ピッチに設置する

※床部の下張りにUタイトを使用した場合は、上張りに必ずジプタイトを使用する。

図面名　コンクリートスラブ、床との納まり

［平成２６年４月版］

標準水平断面図

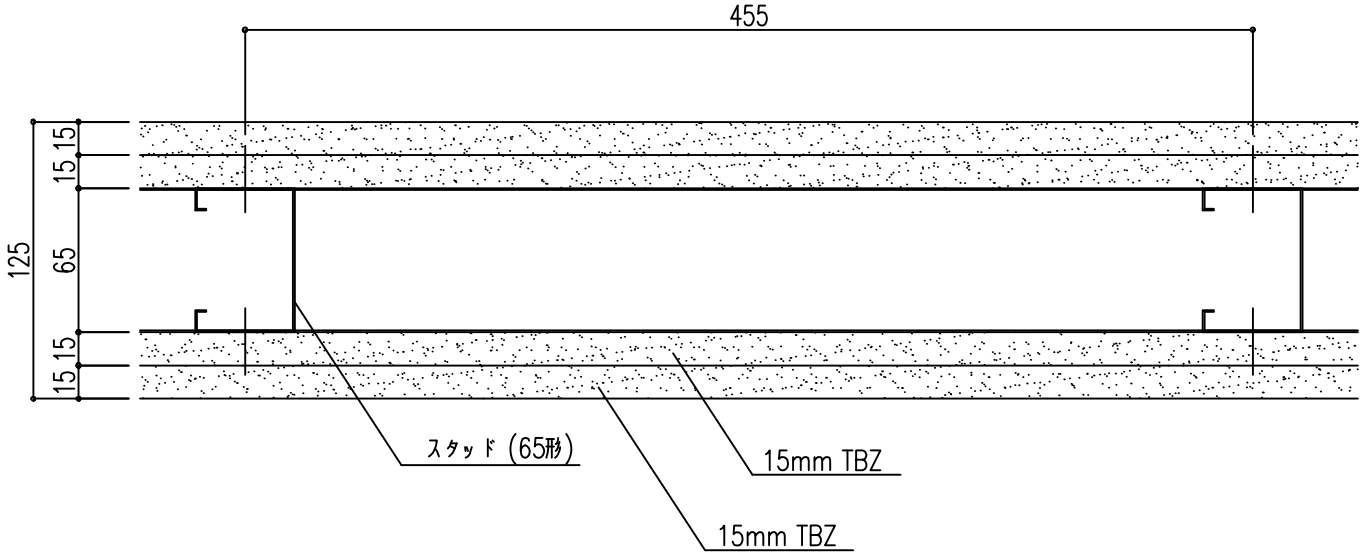

※耐火認定上のスタッド間隔は606mm以内
標準のスタッド間隔は455mmとする。

This page is intentionally blank.

APPENDIX B - COMMON JAPANESE AND ENGLISH NAMES FOR PLANTS

Table 38: Plant Species Types and Names

LATIN NAME	JAPANESE NAME	ENGLISH NAME
EVERGREEN CONIIFER		
Araucaria Heterophylla	Kobano Nanyousugi	Norfolk Island Pine
Pinus Iuchuensis	Rykyu Matsu	None
BROAD LEAF EVERGREEN		
Cinnamomum Camphora	Kusunoki	Comphor Tree
Farfugium Japonicum	Tsuwabuki	None
Juniperus Taxifolia	Okinawa Hainezu	None
Ophiopogon Japonicas	Janohige	None
SMALL EVERGREEN CONIFER		
Podocarpus Macrophyllus	Inumaki	Yew Podocarpus
Ficus Benghalensis	Bengaru Bodaiju	Banyan Tree
Ficus Benjamina	Shidare Gajumaru	Weeping Fig
Ficus Religiosa	Indo Badaiju	Bo Tree
SMALL BROAD LEAF EVERGREEN		
Acacia Confuse	Soushiju	None
Camellia Japonica	Yabutsuibaki	Camellia
Cinnamomum Japonicum	Yabunikkei	None
Citrus Depressa	Hirami Remon	None
Diospyros Ferrea	Ryukyu Kokutan	None
Distylium Racemosum	Isunoki	None
Distylium Racemosum	Kuroganemochi	None
Elaeocarpus Decipiens	Horutonoki	None
Garcinia Subelliptica	Fukugi	None
Grevillea Robusta	Sinobunoki	Silk Oak
Myrica Rubra	Yamamomo	Strawberry Tree
Persea Thunbergii	Tabunoki	None
BROAD LEAF DECIDIOUS TREE		
Bombax Ceiba	Kiwatanoki	Cotton Tree
Cassia Fisulosa	Nanban Saikachi	Golden Shower Tree
Chorisia Speciose	Tokkuri Kiwata	Floss Silk Tree
Delonix Regia	Hououboku	Royal Poinciana
Erythrina Variegate	Deigo	Coral Tree
Jacaranda Mimosaefolia	Shiunboku	Green Ebony
Lagerstroemia Speciose	Oobana Sarusuberi	Queen Crape
Melia Azedarach	Sendan	China Tree
Spathodea Campanulata	Kaenboku	African Tulip Tree
Tabebuia Avellanedae	Ippei	New World Trumpet Tree
Terminalia Catappa	Kobateishi	Oliver Bark Tree
SMALL BROAD LEAF DECIDIOUS TREE		
Albizzia Lebbek	Birumanemu	Lebbeck Tree
Bauhinia Purpurea	Murasaki Soshinka	Butterfly Tree
Erythrina Crista-Galli	Maruba Deigo	Common Coral Tree
Fraxinus Griffithii	Shimatoneriko	None
Lagerstroemia Indica	Sarusuberi	Crape Myrtle

LATIN NAME	JAPANESE NAME	ENGLISH NAME
Lagerstroemia Subcostata	Shima Sarusuberi	None
Liquidambar Formosana	Fu	None
Morus Australis	Shimaguwa	None
Pongamia Pinnata	Kuroyona	Wild Bean
Prunus Campanulata	Hikanzakura	Cherry Tree
Sapium Sebiferum	Nankinhaze	Chinese Tallow Tree
SMALL PALM TREE		
Chrysalidocarpus Lutescens	Areak Yashi	Butterfly Palm
Mascarena Legenicaulis	Tokkuri Yashi	Bottle Palm
Mascarena Verschaffeltii	Tokkuri Yashi Modoki	Verschaffelt Bottle Palm
Phoenix Roebelenii	Shinnou Yashi	Dwarf Date Palm
LARGE PALM TREE		
Archontophoenix Alexandrae	Yusura Yashi	Alexandra Palm
Livistona Chinesis	Birou	Chinese Fan Palm
Roystonea Regia	Daiou Yashi	Cuban Royal Palm
HIGH SHRUB		
Ardisia Ellipiea	Seiron Manryou	None
Caesalpinia Pulcherrima	Oogochou	Peacock Flower
Callistemon Rigidus	Makiba Burashinoki	Stiff Bottle Brush
Cassia Suraftensis	Mokusenna	Glaucos Cassia
Cestrum Nocturnum	Yakouboku	Night Blooming Jasmine
Clerodendron Japonicum	Higiri	Pagoda Flower
Duranta Erecta	Taiwan Rengyou	Pigeon Berry
Euphorbia Pucherrima	Shoujouboku	Poinsettia
Gardenia Jasminoides	Kuchinashi	Gardenia
Hibiscus Mutabilis	Fuyou	Cotton Rose Hibiscus
Hibiscus Syriacus	Mukuge	Rose Of Sharon
Hibiscus Tiliaceus	Oohamabou	None
Jatropha Hastate	Teikinzakura	None
Juniperus Chinensis	Kaizuka Ibuki	Hollywood Juniper
Ligustrum Japonicum	Nezumimochi	Japanese Privet
Messerschmidia Argentea	Monpanoki	Velvetleaf
Viburnum Odoratissimum	Sangoju	None
LOW SHRUB		
Abelia X Grandiflora	Aberia	Glossy Abelia
Acalypha Wilensian	Akarifa	Copper Leaf
Antidesma Pentandrum	Shimayamahihatsu	None
Buxus Microphylla	America Tsuge	Box Wood
Cassia Coluteoids	Kobanosenna	None
Codiaeum Variegatum	Kuroton	Croton
Eurya Emarginata	Hamahisakaki	None
Ficus Microcarpa	Oogon Gajumaru	Chinese Banyan
Ixora Chinensis	Sandanka	Red Ixora
Lespedeza Liukiuensis	Ryukyu Hagi	None
Malvaviscus Arboreus	Himefuyou	Turks Cup
Murraya Paniculata	Gekkitsu	Cosmetic Bark Tree
Pittosporum Tobira	Tobera	Japanese Pittosporum
Raphiolepis Unbellata	Sharinbai	None
Rhododendron Hybrids	Hirado Tsutsuji	Snow Azalea
Rhododendron Indicum	Satsuki	Lateritium

LATIN NAME	JAPANESE NAME	ENGLISH NAME
Rhododendron Scabrum	Kerama Tsutsuji	Azalea
Viburnum Suspensum	Gomoju	None
SHRUB OF A SPECIAL KIND		
Cycas Revoluta	Sotetsu	Japanese Sago Palm
Pandanus Utilis	Fuchibeni Takonoki	Common Screwpine
Pandanus Odoratissimus	Adan	Screw Pine
VINE		
Allamanda Cathartica	Ariiake Kazura	Allamanda
Anigonon Leptopus	Nitobe Kazura	Coral Creeper
Bougain Villea	Bugenbiria	Bougainvillea
Fivus Pumila	Ooitabi	Prumila
Parthenocissus Heterophylla	Amamizuta	Boston Ivy
Passiflora Edulis	Tokeiso	Passion Fruit
Piper Retrofractum	Hihatsumodoki	None
Pseudocalymma Alliaceum	Ninniku Kazura	Garlic Vine
Pyrosteia Miers	Kaen Kazura	Orange Trumpet Vine
Thunbergia Gandiflora	Bengaru Yahazu Kazura	Clock Vine
GROUND COVER		
Alpinia Purpuata	Reddo Jinja	Red Giner
Canna Generalis	Kanna	Canna
Chlorophytum Elatum	Hiroha Orizururan	Milkey Way
Crossostephium Chinense	Mokubyakkou	None
Farfugium Japonicum	Tsuwabuki	None
Hymenocallis Littoralis	Sasakaniyuri	Spider Lilly
Juniperus Taxifolia	Okinawa Hainezu	None
Lantana Camara	Rantana	Lantana
Ophiopogon Japonicas	Janohige	None
Wedelia Trilobata	Wederia	Creeping Daisy
Zephyranthes Candida	Canna	Tamasudare
Zoysia Tenuifolia	Kouraishiba	Manila Grass

This page is intentionally blank.

APPENDIX C – SPECIAL INSPECTIONS AND DESIGNATED SEISMIC SYSTEMS

1. Bracing and special inspection of nonstructural components
2. 01 45 35 Schedule of special inspections
3. 01 45 35 Statement of special inspections
4. Instructions to AE for filling out Statement of Special Inspections and Schedule of Special Inspections.
    a. Do not use UFGS Statement of Special Inspections or Schedule of Special Inspections.
    b. It is the responsibility of the AE to identify and list Designated Seismic Systems and Special Inspections.
    c. JED will provide AE with an editable copy of Statement of Special Inspections and Schedule of Special Inspections upon request.
    d. Insert the Schedule of Special Inspections and Statement of Special Inspections at the end of 01 45 35 Special Inspections.

BRACING and SPECIAL INSPECTION of NONSTRUCTURAL COMPONENTS

1. Bracing of non-structural components addresses two issues:
    - Life Safety such as acoustical ceiling falling to the floor preventing occupants from escaping or light fixtures, VAV, unit heater components falling on an occupant during a seismic event.
    - Failure of non-structural connections may seem minor, but they can result in disruptive nonstructural damage to the component resulting in economic and functionality loss of the building. The risk of fire also increases during an earthquake, further endangering the occupants. Structural damage is a rare event, but nonstructural failures accounts for the majority of earthquake damage.

2. Nonstructural components consist of architectural, mechanical, electrical and plumbing utilities. ASCE 7-10, Chapter 13 establishes the minimum design criteria for nonstructural components permanently attached to structures:
    - Component – the architectural, mechanical, electrical, equipment and plumbing utilities.
    - Support – the method to transfer the loads from the component to the structure.
    - Attachment – the method of actual attachment to the structure.
    - Importance Factor (Ip) – identifies which components are required to be fully functioning during and after a seismic event. Components with an Ip = 1.5 are classified as a "Designated Seismic System" (DSS) per ASCE 7-10, 13.1.3.

    Mechanical and electrical components consist of floor-mounted and suspended equipment. It also includes suspended distributed utilities such as ducts, pipes, conduit or cable trays. These components are essential in providing the necessary function of a building. Nonstructural components in a Hospital, Fire Station, Air Traffic Control Tower are required to be fully functioning both during and after a seismic event. A disruption of these components can make an entire building unusable. In order for a building to properly service the needs of the military after a seismic event, fully functioning components are essential.

3. There are four (4) methods of identifying "Special Inspections":
    - IBC 2015, Chapter 17
    - DSS components as determined in ASCE 7-10, Chapter 13.
    - Manufacturer requirements per IBC 2015, 1705.1.1.
    - UFC 3-301-02 Structural engineering and UFC 3-310-04 Seismic Design of Buildings.

    Special Inspections and identification of DSS components shall be developed by the DOR per IBC 2015, 1704.3 and listed in 01 45 35 "Statement of Special Inspections" (DSS) and "Schedule of Special Inspections". Buildings located in Seismic Design Category = E and assigned to Risk Category III or IV (reference S-001 for seismic values) will require a Special Inspector of record (SIOR). This individual is a licensed engineer, independent third party hired by the Prime Contractor and responsible for the supervision of all "Special Inspections". Special Inspections in Seismic Design Category = E and assigned a Risk Category = I or II shall be conducted by a qualified person hired by the Prime Contractor.

4. USACE Construction shall notify JED Design Branch after the SIOR has made his final walkthrough and has submitted a final comprehensive report that documents all Special Inspections are completed and discrepancies corrected. Design Branch along with Construction will conduct a walk-down inspection of installed Designated Seismic Systems. The inspection team will be comprised of design professionals who are familiar with the installation of mechanical, electrical, and fire protection components and their vulnerabilities to earthquakes.
    a. Record/observations of final walk-down inspection.
    b. Document all required inspections were performed in accordance with the Statement of Special Inspections.
    c. Document that the Designated Seismic Systems were installed in accordance with the construction documents.

SCHEDULE OF SPECIAL INSPECTIONS

Reference UFGS 01 45 35 for all requirements not noted as part of this schedule.

INSPECTION DEFINITIONS:

PERFORM: Perform these tasks for each weld, fastener or bolted connection, and noted verification.

OBSERVE: Observe these items randomly during the course of each work day to ensure that applicable requirements are being met. Operations need not be delayed pending these inspections at contractor's risk.

DOCUMENT: Document, with a report, that the work has been performed in accordance with the contract documents. This is in addition to any other reports required in the Special Inspections guide specification.

CONTINUOUS: Constant monitoring by a special inspector of identified tasks over the duration of performance of said tasks.

PERIODIC: Intermittent monitoring by a special inspector of identified tasks that have been or are being performed.

DESIGNER NOTES (to be deleted after reviewing):

1. This schedule contains minimum requirements. Do not delete applicable inspection tasks unless notes in blue indicate it is acceptable to do so.
2. Blue text = designers notes. The designer must review and edit all blue text in this schedule prior to inserting this schedule into the special inspections spec (UFGS 01 45 35).
3. Check section boxes with ANY inspection tasks applicable to your project. You may choose to delete unchecked sections or leave them in the scheduled unchecked.
4. Individual rows/tasks that that are not applicable to the project may be left in the section, as the inspector can determine whether they occur/apply (e.g. metal trusses in the light gauge framing section for example).
5. Design discipline sections are color coded for easier reference by designers. This schedule does NOT need to be printed in color.
6. When finished editing, delete this note box and save this schedule as a PDF and insert into the project specifications (special inspections section).

A. STRUCTURAL - STEEL – WELDING SECTION

THIS SECTION APPLICABLE IF BOX IS CHECKED: ☐

STEEL INSPECTION PRIOR TO WELDING – VERIFY THE FOLLOWING ARE IN COMPLIANCE IBC 1705.2.1, AISC 360-10: Table C-N5.4-1		
TASK	INSPECTION TYPE[1]	DESCRIPTION
1. Verify that the welding procedures specification (WPS) is available	**PERFORM**	
2. Verify manufacturer certifications for welding consumables are available	**PERFORM**	
3. Verify material identification	**PERFORM**	Type and grade.
4. Welder Identification System	**PERFORM**	The fabricator or erector, as applicable, shall maintain a system by which a welder who has welded a joint or member can be identified. Stamps, if used, shall be the low-stress type.
5. Fit-up of groove welds (including joint geometry)	OBSERVE	✓ Joint preparation ✓ Dimensions (alignment, root opening, root face, bevel) ✓ Cleanliness (condition of steel surfaces) ✓ Tacking (tack weld quality and location) ✓ Backing type and fit (if applicable)
6. Configuration and finish of access holes	OBSERVE	
7. Fit-up of fillet welds	OBSERVE	✓ Dimensions (alignment, gaps at root) ✓ Cleanliness (condition of steel surfaces) ✓ Tacking (tack weld quality and location)
STEEL INSPECTION DURING WELDING – VERIFY THE FOLLOWING ARE IN COMPLIANCE IBC 1705.2.1, AISC 360-10: Table C-N5.4-2		
TASK	INSPECTION TYPE	DESCRIPTION
8. Use of qualified welders	**PERFORM**	Welding by welders, welding operators, and tack welders who are qualified in conformance with requirements.
9. Control and handling of welding consumables	OBSERVE	✓ Packaging ✓ Electrode atmospheric exposure control
10. No welding over cracked tack welds	OBSERVE	
11. Environmental conditions	OBSERVE	✓ Wind speed within limits ✓ Precipitation and temperature
12. Welding Procedures Specification followed	OBSERVE	✓ Settings on welding equipment ✓ Travel speed ✓ Selected welding materials ✓ Shielding gas type/flow rate ✓ Preheat applied ✓ Interpass temperature maintained (min./max.) ✓ Proper position (F, V, H, OH) ✓ Intermix of filler metals avoided
13. Welding techniques	OBSERVE	✓ Interpass and final cleaning ✓ Each pass within profile limitations

[1] **PERFORM**: Perform these tasks for each weld, fastener or bolted connection, and required verification.
OBSERVE: Observe these items on a random sampling basis daily to ensure that applicable requirements are met. Operations need not be delayed pending these inspections at contractor's risk.

		✓ Each pass meets quality requirements

A. STRUCTURAL - STEEL – WELDING SECTION (CONTINUED)

STEEL INSPECTION AFTER WELDING – VERIFY THE FOLLOWING ARE IN COMPLIANCE IBC 2015 1705.2.1, AISC 360-10: Table C-N5.4-3		
TASK	INSPECTION TYPE [1]	DESCRIPTION
14. Welds cleaned	OBSERVE	
15. Size, length, and location of all welds	**PERFORM**	Size, length, and location of all welds conform to the requirements of the detail drawings.
16. Welds meet visual acceptance criteria	**PERFORM AND DOCUMENT**	✓ Crack prohibition ✓ Weld/base-metal fusion ✓ Crater cross section ✓ Weld profiles ✓ Weld size ✓ Undercut ✓ Porosity
17. Arc strikes	**PERFORM**	
18. k-area	**PERFORM**	When welding of doubler plates, continuity plates or stiffeners has been performed in the k-area, visually inspect the web k-area for cracks.
19. Backing removed, weld tabs removed and finished, and fillet welds added where required	**PERFORM**	
20. Repair activities	**PERFORM AND DOCUMENT**	
21. Document acceptance or rejection of welded joint or member	**PERFORM**	

END SECTION

[1] **PERFORM**: Perform these tasks for each weld, fastener or bolted connection, and required verification.
DOCUMENT: Document in a report that the work has been performed as required. This is in addition to all other required reports.

B. STRUCTURAL - STEEL – BOLTING SECTION

THIS SECTION APPLICABLE IF BOX IS CHECKED: ☐

STEEL INSPECTION TASKS PRIOR TO BOLTING – VERIFY THE FOLLOWING ARE IN COMPLIANCE IBC 1705.2.1, AISC 360-10: Table C-N5.6-1		
TASK	INSPECTION TYPE [1]	DESCRIPTION
1. Manufacture's certifications available for fastener materials	**PERFORM**	
2. Fasteners marked in accordance with ASTM requirements	OBSERVE	
3. Proper fasteners selected for joint detail (grade, type, bolt length if threads are to be excluded from shear plane)	OBSERVE	
4. Proper bolting procedure selected for joint detail	OBSERVE	
5. Connecting elements, including appropriate faying surface condition and hole preparation, if specified, meet applicable requirements	OBSERVE	
6. Proper storage provided for bolts, nuts, washers, and other fastener components	OBSERVE	
STEEL INSPECTION TASKS DURING BOLTING – VERIFY THE FOLLOWING ARE IN COMPLIANCE IBC 1705.2.1, AISC 360-10: Table C-N5.6-2		
TASK	INSPECTION TYPE [1]	DESCRIPTION
7. Fastener assemblies of suitable condition, placed in all holes and washers (if required) are positioned as required	OBSERVE	
8. Joint brought to the snug-tight condition prior to pretensioning operation	OBSERVE	
9. Fastener component not turned by the wrench prevented from rotating	OBSERVE	
10. Bolts are pretensioned in accordance with RCSC Specification, progressing systematically from the most rigid point toward the free edges	OBSERVE	
STEEL INSPECTION TASKS AFTER BOLTING – VERIFY THE FOLLOWING ARE IN COMPLIANCE IBC 1705.2.1, AISC 360-10: Table C-N5.6-3		
TASK	INSPECTION TYPE [1]	DESCRIPTION
11. Document acceptance or rejection of all bolted connections	**DOCUMENT**	

END SECTION

[1] **PERFORM**: Perform these tasks for each weld, fastener or bolted connection, and required verification.
OBSERVE: Observe these items on a random sampling basis daily to ensure that applicable requirements are met. Operations need not be delayed pending these inspections at contractor's risk.
DOCUMENT: Document in a report that the work has been performed as required. This is in addition to all other required reports.

C. STRUCTURAL - STEEL - NON DESTRUCTIVE TESTING SECTION

THIS SECTION APPLICABLE IF BOX IS CHECKED: ☐

NONDESTRUCTIVE TESTING OF WELDED JOINTS – VERIFY THE FOLLOWING ARE IN COMPLIANCE IBC 1705.2.1, AISC 360-10: Section N5.5		
TASK	INSPECTION TYPE [1]	DESCRIPTION
1. Use of qualified nondestructive testing personnel	**PERFORM**	Visual weld inspection and nondestructive testing (NDT) shall be conducted by personnel qualified in accordance with AWS D1.8 clause 7.2
2. CJP groove welds	OBSERVE	**[NOTE: DOR must delete this row if section D (SEISMIC PROVISIONS SECTION) is checked]** Dye penetrant testing (DT) and ultrasonic testing (UT) shall be performed on 20% of CJP groove welds for materials greater than 5/16" (8mm) thick. Testing rate must be increased to 100% if greater than 5% of welds tested have unacceptable defects.
3. Welded joints subject to fatigue	OBSERVE	Dye penetrant testing (DT) and Ultrasonic testing (UT) shall be performed on 100% of welded joints identified on contract drawings as being subject to fatigue.
4. Weld tab removal sites	OBSERVE	At the end of welds where weld tabs have been removed, magnetic particle testing shall be performed on the same beam-to-column joints receiving UT

END SECTION

[1] **PERFORM**: Perform these tasks for each weld, fastener or bolted connection, and required verification.
OBSERVE: Observe these items on a random sampling basis daily to ensure that applicable requirements are met. Operations need not be delayed pending these inspections at contractor's risk.

D. STRUCTURAL - STEEL – AISC 341 REQUIREMENTS (SEISMIC PROVISIONS) SECTION

THIS SECTION APPLICABLE IF BOX IS CHECKED: ☐

NONDESTRUCTIVE TESTING OF WELDED JOINTS – VERIFY THE FOLLOWING ARE IN COMPLIANCE IBC 1705.2.1, AISC 341-10: Section J6.2		
TASK	INSPECTION TYPE [1]	DESCRIPTION
[NOTE: DOR may uncheck this section for projects NOT designed in accordance with AISC 341 (Seismic Provisions) or for projects designed according to AISC 341, but using an R value equal to 3]		
5. CJP groove welds	OBSERVE	Dye penetrant testing (DT) and ultrasonic testing (UT) shall be performed on 100% of CJP groove welds for materials greater than 5/16" thick (8mm).
6. Beam cope and access hole.	OBSERVE	At welded splices and connections, thermally cut surfaces of beam copes and access holes shall be tested using magnetic particle testing (MT) or dye penetrant testing (DT), when the flange thickness exceeds 1 1/2 in. for rolled shapes, or when the web thickness exceeds 1 1/2 in. for built-up shapes.
7. K-area NDT (AISC 341)	**PERFORM**	Where welding of doubler plates, continuity plates or stiffeners has been performed in the k-area, the web shall be tested for cracks using magnetic particle testing (MT). The MT inspection area shall include the k-area base metal within 3-inches of the weld. The MT shall be performed no sooner than 48 hours following completion of the welding.
8. Placement of reinforcing or contouring fillet welds	**DOCUMENT**	

END SECTION

[1] **PERFORM**: Perform these tasks for each weld, fastener or bolted connection, and required verification.
OBSERVE: Observe these items on a random sampling basis daily to ensure that applicable requirements are met. Operations need not be delayed pending these inspections at contractor's risk.
DOCUMENT: Document in a report that the work has been performed as required. This is in addition to all other required reports.

E. STRUCTURAL - STEEL - COMPOSITE CONSTRUCTION [1]

THIS SECTION APPLICABLE IF BOX IS CHECKED: ☐

COMPOSITE CONSTRUCTION PRIOR TO PLACING CONCRETE – VERIFY THE FOLLOWING ARE IN COMPLIANCE IBC 1705.2.1, AISC 360-10: Table N6.1, AISC 341-10: Table J9-1		
TASK	INSPECTION TYPE [2]	DESCRIPTION
1. Placement and installation of steel headed stud anchors	**PERFORM**	
2. Material identification of reinforcing steel (Type/Grade)	OBSERVE	
3. Determination of carbon equivalent for reinforcing steel other than ASTM A706	OBSERVE	
4. Proper reinforcing steel size, spacing, clearances, support, and orientation	OBSERVE	
5. Reinforcing steel has been tied and supported as required	OBSERVE	

END SECTION

F. STRUCTURAL - STEEL - OTHER INSPECTIONS

THIS SECTION APPLICABLE IF BOX IS CHECKED: ☐

OTHER STEEL INSPECTIONS – VERIFY THE FOLLOWING ARE IN COMPLIANCE IBC 1705.2.1, AISC 341-10: Tables J8-1 & J10-1		
TASK	INSPECTION TYPE [2]	DESCRIPTION
1. Anchor rods and other embedment supporting structural steel	**PERFORM**	Verify the diameter, grade, type, and length of the anchor rod or embedded item, and the extent or depth of embedment prior to placement of concrete.
2. Fabricated steel or erected steel frame	OBSERVE	Verify compliance with the details shown on the construction documents, such as braces, stiffeners, member locations and proper application of joint details at each connection.
3. Reduced beam sections (RBS) where/if occurs	**DOCUMENT**	✓ Contour and finish ✓ Dimensional tolerances
4. Protected zones	**DOCUMENT**	No holes or unapproved attachments made by fabricator or erector
5. H-piles where/if occurs	**DOCUMENT**	No holes or unapproved attachments made by the responsible contractor

END SECTION

---

[1] See Concrete Construction Section for all concrete related inspection of composite steel construction.

[2] **PERFORM**: Perform these tasks for each weld, fastener or bolted connection, and required verification.
OBSERVE: Observe these items on a random sampling basis daily to ensure that applicable requirements are met. Operations need not be delayed pending these inspections at contractor's risk.
DOCUMENT: Document in a report that the work has been performed as required. This is in addition to all other required reports.

G. STRUCTURAL - COLD-FORMED METAL DECK - PLACEMENT SECTION

THIS SECTION APPLICABLE IF BOX IS CHECKED: ☐

METAL DECK INSPECTION PRIOR TO DECK PLACEMENT – VERIFY THE FOLLOWING ARE IN COMPLIANCE SDI QA/QC-2011, Appendix 1, Table 1.1		
TASK	INSPECTION TYPE [1]	DESCRIPTION
1. Verify compliance of materials (deck and all deck accessories) with construction documents, including profiles, material properties, and base metal thickness	**PERFORM**	
2. Document acceptance or rejection of deck and deck accessories	**DOCUMENT**	
METAL DECK INSPECTION DURING DECK PLACEMENT – VERIFY THE FOLLOWING ARE IN COMPLIANCE SDI QA/QC-2011, Appendix 1, Table 1.2		
TASK	INSPECTION TYPE [1]	DESCRIPTION
3. Verify compliance of deck and all deck accessories installation with construction documents	**PERFORM**	
4. Verify deck materials are represented by the mill certifications that comply with the construction documents	**PERFORM**	
5. Document acceptance or rejection of installation of deck and deck accessories	**DOCUMENT**	
METAL DECK INSPECTION AFTER DECK PLACEMENT – VERIFY THE FOLLOWING ARE IN COMPLIANCE SDI QA/QC-2011, Appendix 1, Table 1.3		
TASK	INSPECTION TYPE [1]	DESCRIPTION
6. Welding procedure specification (WPS) available	**PERFORM**	
7. Manufactures certifications for welding consumables available	OBSERVE	
8. Material identification (type/grade)	OBSERVE	
9. Check welding equipment	OBSERVE	

END SECTION

[1] **PERFORM**: Perform these tasks for each weld, fastener or bolted connection, and required verification.
OBSERVE: Observe these items on a random sampling basis daily to ensure that applicable requirements are met. Operations need not be delayed pending these inspections at contractor's risk.
DOCUMENT: Document in a report that the work has been performed as required. This is in addition to all other required reports.

H. STRUCTURAL - COLD-FORMED METAL DECK – WELDING SECTION

THIS SECTION APPLICABLE IF BOX IS CHECKED: ☐

METAL DECK INSPECTION DURING WELDING – VERIFY THE FOLLOWING ARE IN COMPLIANCE SDI QA/QC-2011, Appendix 1, Table 1.4		
TASK	INSPECTION TYPE [1]	DESCRIPTION
1. Use of qualified welders	OBSERVE	
2. Control and handling of welding consumables	OBSERVE	
3. Environmental conditions (wind speed, moisture, temperature)	OBSERVE	
4. WPS followed	OBSERVE	
METAL DECK INSPECTION AFTER WELDING – VERIFY THE FOLLOWING ARE IN COMPLIANCE SDI QA/QC-2011, Appendix 1, Table 1.5		
TASK	INSPECTION TYPE [1]	DESCRIPTION
5. Verify size and location of welds, including support, sidelap, and perimeter welds.	**PERFORM**	
6. Welds meet visual acceptance criteria	**PERFORM**	
7. Verify repair activities	**PERFORM**	
8. Document acceptance or rejection of welds	**DOCUMENT**	

END SECTION

[1] **PERFORM**: Perform these tasks for each weld, fastener or bolted connection, and required verification.
OBSERVE: Observe these items on a random sampling basis daily to ensure that applicable requirements are met. Operations need not be delayed pending these inspections at contractor's risk.
DOCUMENT: Document in a report that the work has been performed as required. This is in addition to all other required reports.

I. STRUCTURAL - COLD-FORMED METAL DECK – FASTENING SECTION

THIS SECTION APPLICABLE IF BOX IS CHECKED: ☐

METAL DECK INSPECTION BEFORE MECHANICAL FASTENING – VERIFY THE FOLLOWING ARE IN COMPLIANCE SDI QA/QC-2011, Appendix 1, Table 1.6		
TASK	INSPECTION TYPE [1]	DESCRIPTION
1. Manufacturer installation instructions available for mechanical fasteners	OBSERVE	
2. Proper tools available for fastener installation	OBSERVE	
METAL DECK INSPECTION DURING MECHANICAL FASTENING – VERIFY THE FOLLOWING ARE IN COMPLIANCE SDI QA/QC-2011, Appendix 1, Table 1.7		
TASK	INSPECTION TYPE [1]	DESCRIPTION
3. Fasteners are positioned as required	OBSERVE	
4. Fasteners are installed in accordance with manufacturer's instructions	OBSERVE	
METAL DECK INSPECTION AFTER MECHANICAL FASTENING – VERIFY THE FOLLOWING ARE IN COMPLIANCE SDI QA/QC-2011, Appendix 1, Table 1.8		
TASK	INSPECTION TYPE [1]	DESCRIPTION
5. Check spacing, type, and installation of support fasteners	**PERFORM**	
6. Check spacing, type, and installation of sidelap fasteners	**PERFORM**	
7. Check spacing, type, and installation of perimeter fasteners	**PERFORM**	
8. Verify repair activities	**PERFORM**	
9. Document acceptance or rejection of mechanical fasteners	**DOCUMENT**	

END SECTION

[1] **PERFORM**: Perform these tasks for each weld, fastener or bolted connection, and required verification.
OBSERVE: Observe these items on a random sampling basis daily to ensure that applicable requirements are met. Operations need not be delayed pending these inspections at contractor's risk.
DOCUMENT: Document in a report that the work has been performed as required. This is in addition to all other required reports.

J. STRUCTURAL - LIGHT GAUGE STEEL FRAMING AND/OR LIGHT GAUGE TRUSSES SECTION

THIS SECTION APPLICABLE IF BOX IS CHECKED: ☐

LIGHT GAUGE STEEL CONSTRUCTION AND CONNECTIONS – VERIFY THE FOLLOWING ARE IN COMPLIANCE IBC 1705.2.2, 1705.11.2, 1705.11.3, UFC 4 023 03		
TASK	INSPECTION TYPE[1]	DESCRIPTION
1. Trusses spanning 60-feet or greater where/if applies	**PERFORM**	Verify that temporary and permanent truss restraint/bracing is installed in accordance with approved truss submittal package.
2. Welded connections (seismic and/or wind resisting system)	OBSERVE	Visually inspect all welds composing part of the main wind or seismic force resisting system, including shearwalls, braces, collectors (drag struts), and hold-downs. **[NOTE: DOR must identify critical wind and/or seismic force resisting welds in the contract drawings so that the special inspector can confirm compliance.]**
3. Connections (seismic and/or wind resisting system)	OBSERVE	Visually inspect all screw attachment, bolting, anchoring and other fastening of components within the main wind or seismic force resisting system, including roof deck, roof framing, exterior wall covering, wall to roof/floor connections, braces, collectors (drag struts) and hold-downs. **[NOTE: DOR must identify critical wind and/or seismic force resisting connection/fastener components in the contract drawings so that the special inspector can confirm compliance.]**
4. Cold-formed steel (progressive collapse resisting system where/if applies)	OBSERVE	Verify proper welding operations, screw attachment, bolting, anchoring and other fastening of components within the progressive collapse resisting system, including horizontal tie force elements, vertical tie force elements and bridging elements (UFC 4 023 03). **[NOTE: DOR must identify critical progressive collapse resisting connection/fastener components in the contract drawings so that the special inspector can confirm compliance.]**

END SECTION

K. STRUCTURAL - OPEN-WEB STEEL JOISTS SECTION

THIS SECTION APPLICABLE IF BOX IS CHECKED: ☐

OPEN-WEB STEEL JOISTS AND JOIST GIRDERS – VERIFY THE FOLLOWING ARE IN COMPLIANCE IBC TABLE 1705.2.3		
TASK	INSPECTION TYPE[1]	DESCRIPTION
1. Installation of open-web steel joists and joist girders	OBSERVE	✓ End connections – welded or bolted ✓ Bridging – horizontal and diagonal

END SECTION

[1] **PERFORM**: Perform these tasks for each weld, fastener or bolted connection, and required verification.
OBSERVE: Observe these items on a random sampling basis daily to ensure that applicable requirements are met. Operations need not be delayed pending these inspections at contractor's risk.

L. STRUCTURAL - CONCRETE CONSTRUCTION SECTION

THIS SECTION APPLICABLE IF BOX IS CHECKED: ☐

CONCRETE CONSTRUCTION, INCLUDING COMPOSITE DECK – VERIFY THE FOLLOWING ARE IN COMPLIANCE IBC TABLE 1705.3 (ACI 318 REFERENCES NOTED IN IBC TABLE)		
TASK	INSPECTION TYPE [1]	DESCRIPTION
1. Inspect reinforcement, including prestressing tendons, and verify placement.	PERIODIC	Verify prior to placing concrete that reinforcing is of specified type, grade and size; that it is free of oil, dirt and unacceptable rust; that it is located and spaced properly; that hooks, bends, ties, stirrups and supplemental reinforcement are placed correctly; that lap lengths, stagger and offsets are provided; and that all mechanical connections are installed per the manufacturer's instructions and/or evaluation report. **[NOTE: DOR must identify critical progressive collapse resisting connection/fastener components in the contract drawings so that the special inspector can confirm compliance.]**
2. Reinforcing bar welding	PERIODIC	✓ Verify weldability of reinforcing bars other than ASTM A 706 ✓ Inspect single-pass fillet welds, maximum 5/16" in accordance with AWS D1.4
3. All other welding	**CONTINUOUS**	Visually inspect all welds in accordance with AWS D1.4
4. Cast in place anchors and post installed drilled anchors (downward inclined)	PERIODIC	Verify prior to placing concrete that cast in place anchors and post installed drilled anchors have proper embedment, spacing and edge distance.
5. Post-installed adhesive anchors in horizontal or upward inclined orientations	**CONTINUOUS AND DOCUMENT**	✓ Inspect as required per approved ICC-ES report ✓ Verify that installer is certified for installation of horizontal and overhead installation applications ✓ Inspect proof loading as required by the contract documents
6. Verify use of required mix design	PERIODIC	Verify that all mixes used comply with the approved construction documents
7. Prior to concrete placement, fabricate specimens for strength tests, perform slump and air content tests, and determine the temperature of the concrete	**CONTINUOUS**	At the time fresh concrete is sampled to fabricate specimens for strength test verify these tests are performed by qualified technicians.
8. Inspect concrete and/or shotcrete placement for proper application techniques	**CONTINUOUS**	Verify proper application techniques are used during concrete conveyance and depositing avoids segregation or contamination. Verify that concrete is properly consolidated.
9. Verify maintenance of specified curing temperature and technique	PERIODIC	Inspect curing, cold weather protection, and hot weather protection procedures.

[1] **OBSERVE**: Observe these items on a random sampling basis daily to ensure that applicable requirements are met. Operations need not be delayed pending these inspections at contractor's risk.
DOCUMENT: Document in a report that the work has been performed as required. This is in addition to all other required reports.
CONTINUOUS: Constant monitoring of identified tasks by a special inspector over the duration of performance of said tasks.

10. Pre-stressed concrete	**CONTINUOUS**	Verify application of prestressing forces and grouting of bonded prestressing tendons.

CONTINUED ON FOLLOWING PAGE

STRUCTURAL - CONCRETE CONSTRUCTION (CONTINUED)

CONCRETE CONSTRUCTION, INCLUDING COMPOSITE DECK – VERIFY THE FOLLOWING ARE IN COMPLIANCE IBC TABLE 1705.3 (ACI 318 REFERENCES NOTED IN IBC TABLE)		
TASK	INSPECTION TYPE [1]	DESCRIPTION
11. Inspect erection of precast concrete members	OBSERVE	
12. Verify in-situ concrete strength, prior to stressing of tendons in post-tensioned concrete and prior to removal of shores and forms from beams and structural slabs.	OBSERVE	
13. Inspect formwork for shape, location and dimensions of the concrete member being formed.	OBSERVE	

END SECTION

[1] **PERIODIC**: Observe these items on a random sampling basis daily to ensure that applicable requirements are met. Operations need not be delayed pending these inspections at contractor's risk.
DOCUMENT: Document in a report that the work has been performed as required. This is in addition to all other required reports.
CONTINUOUS: Constant monitoring of identified tasks by a special inspector over the duration of performance of said tasks.

M. STRUCTURAL - MASONRY CONSTRUCTION SECTION (ALL RISK CATEGORIES)

THIS SECTION APPLICABLE IF BOX IS CHECKED: ☐

MASONRY CONSTRUCTION – VERIFY THE FOLLOWING ARE IN COMPLIANCE AT START OF CONSTRUCTION IBC 1705.4 (ACI 530-13 TABLE 3.1.2 & 3.1.3)		
TASK	INSPECTION TYPE [1]	DESCRIPTION
1. Compliance with approved submittals prior to start	PERIODIC	
2. Proportions of site-mixed mortar.	PERIODIC	
3. Grade and type of reinforcement, anchor bolts, and prestressing tendons and anchorages	PERIODIC	
4. Prestressing technique	PERIODIC	
5. Properties of thin bed mortar for AAC masonry	PERIODIC	
MASONRY CONSTRUCTION – VERIFY THE FOLLOWING ARE IN COMPLIANCE PRIOR TO GROUTING IBC 1705.4 (ACI 530-13 TABLE 3.1.2 & 3.1.3)		
TASK	INSPECTION TYPE [1]	DESCRIPTION
6. Grout space	**PERIODIC** **CONTINUOUS**	**[NOTE: DOR must either delete 'PERIODIC' for Risk Category IV/V, or delete 'CONTINUOUS' for Risk Categories I/II/ III]**
7. Proportions of site-prepared grout and prestressing grout for bonded tendons	PERIODIC	
8. Proportions of site-mixed grout and prestressing grout for bonded tendons	PERIODIC	
9. Placement of masonry units and mortar joints	PERIODIC	
10. Welding of reinforcement	**CONTINUOUS**	
MASONRY CONSTRUCTION – VERIFY THE FOLLOWING ARE IN COMPLIANCE DURING CONSTRUCTION IBC 1705.4 (ACI 530-13 TABLE 3.1.2 & 3.1.3)		
TASK	INSPECTION TYPE [1]	DESCRIPTION
11. Size and location of structural elements is in compliance	PERIODIC	
12. Preparation, construction, and protection of masonry during cold weather (temperature below 40°F (4.4°c) or hot weather (temp above 90°F (32.2°C))	PERIODIC	
13. Application and measurement of prestressing force	**CONTINUOUS**	
14. Placement of grout and prestressing grout for bonded tendons	**CONTINUOUS**	
15. Placement of AAC masonry units and construction of thin bed mortar joints	**CONTINUOUS**	Continuous for first 5000 square feet only (465 square meters).
16. Observe preparation of grout specimens, mortar specimens, and/or prisms	PERIODIC	
17. Type, size and placement of reinforcement, connectors, anchor bolts and prestressing tendons and anchorages, including details of	**PERIODIC** **CONTINUOUS**	**[NOTE: DOR must either delete 'PERIODIC' for Risk Category IV/V, or delete**

[1] **PERIODIC**: Observe these items on a random sampling basis daily to ensure that applicable requirements are met. Operations need not be delayed pending these inspections at contractor's risk.

CONTINUOUS: Constant monitoring of identified tasks by a special inspector over the duration of performance of said tasks.

anchorage of masonry to structural members, frames, or other construction		**'CONTINUOUS' for Risk Categories I/II/III]**

END SECTION

N. STRUCTURAL - WOOD CONSTRUCTION – SPECIALTY ITEMS SECTION

THIS SECTION APPLICABLE IF BOX IS CHECKED: ☐

WOOD CONSTRUCTION – VERIFY THE FOLLOWING ARE IN COMPLIANCE IBC 1705.5		
TASK	INSPECTION TYPE [1]	DESCRIPTION
1. High-load diaphragms where applicable	PERIODIC	Verify thickness and grade of sheathing, size of framing members at panel edges, nail diameters and length, and the number of fastener lines and that fastener spacing is per approved contract documents.
2. Metal-plate connected wood trusses spanning 60 feet or greater	PERIODIC	Verify that the temporary installation restraint/bracing and the permanent individual truss member restraint/bracing are installed in accordance with the approved truss submittal package

END SECTION

O. STRUCTURAL - WOOD CONSTRUCTION - SEISMIC & WIND SECTION

THIS SECTION APPLICABLE IF BOX IS CHECKED: ☐

WOOD CONSTRUCTION SEISMIC AND WIND – VERIFY THE FOLLOWING ARE IN COMPLIANCE IBC 1705.5		
TASK	INSPECTION TYPE [1]	DESCRIPTION
[NOTE: DOR may uncheck this section where sheathing nailing/fasteners (both shearwall and roof) are consistently greater than 4" on center, or if the design wind speed is less than 110 mph (49 meters/sec) AND the seismic design category is A or B]		
1. Nailing, bolting, anchoring and other fastening of elements of the main wind/seismic force-resisting system	PERIODIC	Includes connectors for: shearwall sheathing, roof/floor sheathing, drag struts/collectors, braces, hold downs, roof and floor framing connections to exterior walls.

END SECTION

P. STRUCTURAL – ISOLATION AND ENERGY DISSIPATION SYSTEMS SECTION

THIS SECTION APPLICABLE IF BOX IS CHECKED: ☐

ISOLATION AND ENERGY DISSIPATION SYSTEMS – VERIFY THE FOLLOWING ARE IN COMPLIANCE IBC TABLE 1705.2.3		
TASK	INSPECTION TYPE [1]	DESCRIPTION
1. Fabrication and installation	PERIODIC	Verify that fabrication and installation of isolator units and energy dissipation devices conform to manufacturer's recommendations and approved construction documents

END SECTION

[1] **PERIODIC**: Observe these items on a random sampling basis daily to ensure that applicable requirements are met. Operations need not be delayed pending these inspections at contractor's risk.

Q. GEOTECHNICAL - SOILS INSPECTION SECTION

THIS SECTION APPLICABLE IF BOX IS CHECKED: ☐

SOILS INSPECTION – VERIFY THE FOLLOWING ARE IN COMPLIANCE IBC 1705.6		
TASK	INSPECTION TYPE [1]	DESCRIPTION
1. Materials below shallow foundations are adequate to achieve the design bearing capacity.	PERIODIC	
2. Excavations are extended to proper depth and have reached proper material	PERIODIC	
3. Verify use of proper materials, densities and lift thicknesses during placement and compaction of compacted fill	**CONTINUOUS**	
4. Prior to placement of compacted fill, inspect subgrade and verify that site has been prepared properly.	PERIODIC	During fill placement, the special inspector shall verify that proper materials and procedures are used in accordance with the provisions of the approved geotechnical report

END SECTION

R. GEOTECHNICAL - DRIVEN DEEP FOUNDATION ELEMENTS SECTION

THIS SECTION APPLICABLE IF BOX IS CHECKED: ☐

DEEP DRIVEN FOUNDATION CONSTRUCTION – VERIFY THE FOLLOWING ARE IN COMPLIANCE IBC 1705.5		
TASK	INSPECTION TYPE [1]	DESCRIPTION
1. Verify element materials, sizes and lengths comply with requirements	**CONTINUOUS**	
2. Inspect driving operations and maintain complete and accurate records for each element	**CONTINUOUS**	
3. Verify placement locations and plumbness, confirm type and size of hammer, record number of blows per foot of penetration, determine required penetrations to achiever design capacity, record tip and butt elevations and document ay damage to foundation element	**CONTINUOUS**	

END SECTION

[1] **PERIODIC**: Observe these items on a random sampling basis daily to ensure that applicable requirements are met. Operations need not be delayed pending these inspections at contractor's risk.

CONTINUOUS: Constant monitoring of identified tasks by a special inspector over the duration of performance of said tasks.

S. GEOTECHNICAL - HELICAL PILE FOUNDATIONS SECTION

THIS SECTION APPLICABLE IF BOX IS CHECKED: ☐

HELICAL PILE FOUNDATIONS – VERIFY THE FOLLOWING ARE IN COMPLIANCE IBC 1705.9		
TASK	INSPECTION TYPE [1]	DESCRIPTION
1. Record installation equipment used, pile dimensions, tip elevations, final depth, final installation torque and other pertinent installation data. The approved geotechnical report and the contract documents shall be used to determine compliance	**CONTINUOUS**	

END SECTION

T. GEOTECHNICAL - CAST IN PLACE DEEP FOUNDATION ELEMENTS SECTION

THIS SECTION APPLICABLE IF BOX IS CHECKED: ☐

CAST IN PLACE DEEP FOUNDATION ELEMENTS – VERIFY THE FOLLOWING ARE IN COMPLIANCE IBC 1705.8		
TASK	INSPECTION TYPE [1]	DESCRIPTION
1. Inspect drilling operations and maintain complete and accurate records for each element.	**CONTINUOUS**	
2. Verify placement locations and plumbness, confirm element diameters, bell diameters (if applicable), lengths, embedment into bedrock (if applicable and adequate end-bearing strata capacity. Record concrete or grout volumes	**CONTINUOUS**	

END SECTION

[1] **CONTINUOUS:** Constant monitoring of identified tasks by a special inspector over the duration of performance of said tasks.

U. FIRE PROTECTION - SPRAYED FIRE-RESISTANT MATERIALS SECTION

THIS SECTION APPLICABLE IF BOX IS CHECKED: ☐

SPRAYED FIRE RESISTANT MATERIALS – VERIFY THE FOLLOWING ARE IN COMPLIANCE IBC 1705.14		
TASK	INSPECTION TYPE [1]	DESCRIPTION
1. Surface condition	PERIODIC	Prior to application confirm that surface has been prepared per the approved fire-resistance design and manufacturer's instructions.
2. Application	PERIODIC	Prior to application confirm that the substrate meets the minimum ambient temperature per the approved fire-resistance design and manufacturer's instructions.
3. Material thickness	PERIODIC	Verify that the thickness of the SFRM to structural elements is not less than the thickness require by the fire-resistant design in more that 10 percent of the measurement, but in no case less than minimum allowable thickness required by 1705.14.
4. Material density	PERIODIC	Verify that the thickness of the SFRM to structural elements is not less than the thickness require by the fire-resistant design in more than 10 percent of the measurement, but in no case less than minimum allowable thickness required by IBC 1705.14.5
5. Bond strength	PERIODIC	Verify cohesive/adhesive bond strength of the cured SFRM applied to the structural element is not less than 150psf and according to IBC 1705.14.6

END SECTION

V. FIRE PROTECTION - MASTIC AND INTUMESCENT COATINGS SECTION

THIS SECTION APPLICABLE IF BOX IS CHECKED: ☐

MASTIC AND INTUMESCENT FIRE-RESISTANT COATINGS – VERIFY THE FOLLOWING ARE IN COMPLIANCE IBC 1705.15		
TASK	INSPECTION TYPE [1]	DESCRIPTION
1. Surface preparation	PERIODIC	Inspections shall be performed in accordance with AWCI 12-B and the contract documents

END SECTION

W. FIRE PROTECTION – FIRE RESISTANT PENETRATIONS AND JOINTS SECTION

THIS SECTION APPLICABLE IF BOX IS CHECKED: ☐

FIRE RESISTANT PENETRATIONS AND JOINTS – VERIFY THE FOLLOWING ARE IN COMPLIANCE IBC 1705.17		
TASK	INSPECTION TYPE [1]	DESCRIPTION
1. Inspections of penetration firestop systems conducted in accordance with ASTM E 2174.	PERFORM	**[NOTE: This section applies to Risk Category III, IV, & V only. DOR may choose to uncheck this section where project is assigned to Risk Category I or II. Confirm Risk Category with Structural Engineer]**
2. Inspections of fire-resistant joint systems conducted in accordance with ASTM E 2393	PERFORM	

END SECTION

[1] **PERIODIC**: Observe these items on a random sampling basis daily to ensure that applicable requirements are met. Operations need not be delayed pending these inspections at contractor's risk.

X. FIRE PROTECTION – SMOKE CONTROL SECTION

THIS SECTION APPLICABLE IF BOX IS CHECKED: ☐

SMOKE CONTROL – VERIFY THE FOLLOWING ARE IN COMPLIANCE IBC 1705.17		
TASK	INSPECTION TYPE [1]	DESCRIPTION
1. Verify device locations and perform leakage testing	PERIODIC	Perform during erection of ductwork and prior to concealment
2. Pressure difference testing, flow measurements and detection and control verification	PERIODIC	Perform prior to occupancy and after sufficient completion

END SECTION

[1] **PERIODIC**: Observe these items on a random sampling basis daily to ensure that applicable requirements are met. Operations need not be delayed pending these inspections at contractor's risk.

Y. ARCHITECTURAL - EXTERIOR INSULATION AND FINISH SYSTEMS SECTION

THIS SECTION APPLICABLE IF BOX IS CHECKED: ☐

EXTERIOR INSULATION AND FINISH SYSTEMS (EIFS) – VERIFY THE FOLLOWING ARE IN COMPLIANCE IBC 1705.16		
TASK	INSPECTION TYPE [1]	DESCRIPTION
1. Water resistive barrier coating applied over a sheathing substrate.	PERIODIC	Verify that water resistive barrier coating complies with ASTM E 2570. **[NOTE: not applicable to masonry or concrete wall applications. Uncheck this section in those cases]**

END SECTION

Z. ARCHITECTURAL – ARCHITECTURAL COMPONENTS

THIS SECTION APPLICABLE IF BOX IS CHECKED: ☐

ARCHITECTURAL COMPONENTS – VERIFY THE FOLLOWING ARE IN COMPLIANCE IBC 1705.12.5, 1705.12.7		
TASK	INSPECTION TYPE [1]	DESCRIPTION
[NOTE: This section is not applicable to Seismic Design Categories A, B, & C. Uncheck this section if one of those categories applies. Confirm Seismic Design Category with the structural engineer]		
1. Erection and fastening of exterior cladding and interior and exterior veneer.	PERIODIC	Verify appropriate materials, fasteners and attachment at commencement of work and at completion. **Inspector Note: Inspection not required if height is less than 30 feet or weight is less than 5psf**
2. Interior and exterior non-load bearing walls	PERIODIC	Verify appropriate materials, fasteners and attachment at commencement of work and at completion. **Inspector Note: Inspection not required if height is less than 30 feet. Also, Interior non-load bearing walls need not be inspected if weighing less than 15psf**
3. Access floors	PERIODIC	Verify that anchorage complies with approved construction documents. Inspection of post-installed anchors shall comply with approved ICC-ES report
4. Storage racks	PERIODIC	Verify that anchorage complies with approved construction documents. Inspection of post-installed anchors shall comply with approved ICC-ES report. **Inspector Note: Not required for racks less than 8 feet in height**
5. Acoustical ceiling with 7/8 inch wall molding and clip	PERIODIC	Verify ceiling system is installed per manufacturer details. Conduct special inspection per IBC 2015, 1705.1.1 and provide certification from manufacturer based on the Seismic Design Category of the project.
6. Acoustical ceiling with 2 inch wall molding and no clip	PERIODIC	Verify ceiling system is installed per ASTM E580.
7. Elevator equipment, supports and seismic switch	PERIODIC	Verify anchors have been prequalified per ACI 355.2 and designed per ACI 318 Appendix D.

[1] **PERIODIC**: Observe these items on a random sampling basis daily to ensure that applicable requirements are met. Operations need not be delayed pending these inspections at contractor's risk.

PERIODIC: Intermittent monitoring by a special inspector of identified tasks that have been or are being performed.

		Locate switch on loadbearing wall or column. Do not attach to metal stud wall.
8. Concrete roof topping	PERIODIC	Verify connection dowels into topping have been installed per shop drawings.

END SECTION

AA. PLUMBING/MECHANICAL DESIGNATED SEISMIC SYSTEMS SECTION

THIS SECTION APPLICABLE IF BOX IS CHECKED: ☐

PLUMBING AND MECHANICAL - DESIGNATED SEISMIC SYSTEMS IBC 1705.12.4		
TASK	INSPECTION TYPE [1]	DESCRIPTION
[NOTE: This section is not applicable to Seismic Design Categories A or B. Uncheck this section if one of those categories applies. Confirm Seismic Design Category with structural engineer]		
1. Designated Seismic Systems equipment verification	PERIODIC	✓ Verify model number and serial number are in conformance with project specific seismic qualification (PSSQ) ✓ Verify Tag ID is correct and installed per specifications
2. Designated Seismic Systems equipment Mounting	PERIODIC	✓ Verify that Anchor Base Bolting is installed per PSSQ ✓ Verify that Equipment Bracing is Installed per PSSQ ✓ Verify that Bracing Attachments are installed per PSSQ
3. Designated Seismic Systems utility Conduit/Piping	PERIODIC	✓ Verify that Conduit/Piping is connected to the equipment per PSSQ (flex or rigid) ✓ Verify that Conduit/Piping is seismically supported independently of equipment and in accordance with PSSQ support requirements
4. Designated Seismic Systems clearance	PERIODIC	✓ Adjacent Equipment – Verify that there is adequate gap to eliminate possibility of pounding ✓ Conduit/Piping - Verify that there is adequate gap to eliminate possibility of pounding
5. Installation of Vibration Isolation System (Snubber)	PERIODIC	✓ Verify Anchors have been pre-qualified per ACI 355.2 and designed per ACI 318 Appendix D.

END SECTION

[1] **PERIODIC**: Observe these items on a random sampling basis daily to ensure that applicable requirements are met. Operations need not be delayed pending these inspections at contractor's risk.

PERIODIC: Intermittent monitoring by a special inspector of identified tasks that have been or are being performed.

BB. ELECTRICAL DESIGNATED SEISMIC SYSTEMS SECTION

THIS SECTION APPLICABLE IF BOX IS CHECKED: ☐

ELECTRICAL - DESIGNATED SEISMIC SYSTEMS IBC 1705.12.4		
TASK	INSPECTION TYPE [1]	DESCRIPTION
[NOTE: This section is not applicable to Seismic Design Categories A or B. Uncheck this section if one of those categories applies. Confirm Seismic Design Category with structural engineer]		
1. Generator	PERIODIC	✓ Verify certification of emergency generator, ATS, switchgear, and control panelboard by NIPPON Engine Generator Association (NEGA) ✓ Verify conformance with the Fire Protection Law of Standby Generator
2. Automatic Transfer Switch (ATS)	PERIODIC	✓ Verify certification of emergency generator, ATS, switchgear, and control panelboard by NIPPON Engine Generator Association (NEGA) ✓ Verify conformance with the Fire Protection Law of Standby Generator
3. Uninterrupted Power Source (UPS)	PERIODIC	✓ Verify anchors have been pre-qualified per ACI 355.2 and designed per ACI 318 Appendix D.
4. Electrical Panels	PERIODIC	✓ Verify anchors have been pre-qualified per ACI 355.2 and designed per ACI 318 Appendix D.
5. Switchgear	PERIODIC	✓ Verify Anchors have been pre-qualified per ACI 355.2 and designed per ACI 318 Appendix D.
6. Emergency Fixtures	PERIODIC	✓ Verify light fixtures have been installed per ASTM E580.

END SECTION

[1] **PERIODIC**: Observe these items on a random sampling basis daily to ensure that applicable requirements are met. Operations need not be delayed pending these inspections at contractor's risk.

PERIODIC: Intermittent monitoring by a special inspector of identified tasks that have been or are being performed.

Project:	P234 - Maintenance Hangar
Location:	Anytown, VA
Project #:	12345678
Date:	4/10/2017

STATEMENT OF SPECIAL INSPECTIONS

Project Seismic Design Category:	E	
Project Risk Category:	IV	
Project Design Wind Speed (mph):	100	
Number of Stories:	2	
Structure Height Above Grade (ft):	70	
Hazardous Occupancy or attached to such?	No	Group H Occupancies (2015 IBC, Section 415)

Special Inspector of Record (SIOR)

A Special Inspector of Record (SIOR) **IS** required (per UFGS 01 45 35, Section 1.3.8)

SIOR Name (Registered Professional):	John Doe P.E.
Professional Registration Number:	C222222
Consulting Firm Name (if any):	ABC Structural Consulting
SIOR Office AND Mobile Phone Number:	1234567895 (Mobile), 123456789 (Office)

Lateral Force Resisting System (LFRS)

2015 IBC 1704.3.2 and 1704.3.3

Following is a listing of critical main wind/seismic force resisting systems for this structure. Carefully inspect these elements as part of the roles and responsiblities of the Special Inspector (reference the Schedule of Special Inspections for inspection checklists).

Vertical LFRS Elements	Notes
Ordinary Concentric Braced Frames	North - South Direction Only, See Plan
Special Concentric Braced Frames	Lettered Gridline only, see plan for call out
Ordinary Steel Moment resisting Frames (SMRF)	Both orthogonal Directions, See plan for call out
Ordinary Reinforced Concrete Shearwalls	See Key Notes
Concrete Grade Beams Resisting Lateral Loads	Office Portion Only, see plan key notes
Ordinary Reinforced Masonry Shear Walls	High Bay, Numbered Gridlines only, see plan
OSB Sheathed Shear Walls (nailing, sill bolting, Etc)	See schedule on plan
Shear Wall Hold Downs	Identified on Plan & in Detail Sheet X.XX
Horizontal LFRS Elements	**Notes**
Continuous Roof Ties	See Key Notes on Roof Plan
Collector Elements	Identified on plan with key notes
Concrete over metal deck	2nd floor and roof
Metal Roof Deck & Related Fastening System	See Roof Plan
Out of Plane Wall Connections	See Structural Details XX & XX
Diaphragm Cross Rod Bracing	See Roof Plan for locations
Cast in Place Concrete Floor and Roof Diaphragms	See sheet XX for details and rebar schedule
Special Force Transfer Connection	See Detail X on Sheet X.XX

Project: P234 - Maintenance Hangar
Location: Anytown, VA
Project #: 12345678
Date: 4/10/2017

Designated Seismic Systems (DSS)

(2015 IBC 1705.13.3.4) (ASCE 7-10, 13.2.2, C13.2.2) (UFC 3-310-04, 2-11.2 & 2-13.2.2)

Non-structural 'Designated Seismic Systems' (DSS) have an I_p greater than 1.0, and must be certified by the manufacturer to remain operable after a design earthquake. The Prime Contractor shall collect the manufacturers Certificates of Compliance for incorporation into the Operations and Maintenance manual per Section 01 78 23 paragraph 1.3. The SIOR shall review the Certificates of Compliance as part of the special inspection. Additionally, the below listed Designated Seismic Systems must be carefully inspected by the Special Inspector according to the requirements noted in the Schedule of Special Inspections.

ELECTRICAL Designated Seismic Systems (DSS) Requiring a Certificate of Compliance	
1.	DSS Emergency or Standby Power System
2.	DSS Uninterrupted Power Switch
3.	DSS Inverter
4.	DSS Electrical Panels
5.	DSS Switchgear

If additional space is required, append an additional sheet listing the remaining DSS

MECHANICAL/PLUMBING Designated Seismic Systems (DSS) Requiring a Certificate of Compliance	
1.	Designer to identify components in or attached to a Risk Category IV structure and is needed for continued operation.
2.	DSS Component XX
3.	DSS Component XX
4.	DSS Component XX
5.	DSS Component XX

If additional space is required, append an additional sheet listing the remaining DSS

OTHER Designated Seismic Systems (DSS) Requiring a Certificate of Compliance	
1.	DSS Building fire sprinkler systems
2.	DSS Elevator equipment, supports and seismic switch
3.	DSS Fire alarm panel
4.	DSS Fire pump
5.	DSS Fire pump controller

Final Walk Down Inspection and Report

At the completion of the project the SIOR will conduct a final walk-down inspection and submit a comprehensive final report.

Final Walk Down Report, Must Include:

1. Record observations of Final Walk Down Inspection
2. Document that Inspections were performed in accordance with the Schedule of Special Inspections
3. Document that all Designated Seismic Systems are installed according to construction/manufacturer document requirements, and that Compliance Certificates have been collected (UFC 3-310-04, 2-13.2.2.1).

APPENDIX D

MCIPAC-MCB Camp Butler Policy Letter 3-19, "Supplement to Unified Facilities Criteria 4-010-01 Minimum Antiterrorism Standards for Buildings in Japan"

AND

Protective Design Center Technical Report PDC-TR 12-08 Rev 3, "Standoff Distances for Japanese Conventional Construction"

UNITED STATES MARINE CORPS
MARINE CORPS INSTALLATIONS PACIFIC-MCB CAMP BUTLER
UNIT 35001
FPO AP 96373-5001

IN REPLY REFER TO:
5532
G-3/5

MAY 09 2019

MARINE CORPS INSTALLATIONS PACIFIC-MCB CAMP BUTLER POLICY LETTER 3-19

From: Commanding General, Marine Corps Installations Pacific-MCB Camp Butler
To: Distribution List

Subj: SUPPLEMENT TO UNIFIED FACILITIES CRITERIA 4-010-01 MINIMUM ANTITERRORISM STANDARDS FOR BUILDINGS IN JAPAN

Ref: (a) UFC 4-010-01 DoD Minimum Antiterrorism Standards for Buildings
(b) PACOMINST 0536.2 United States Pacific Command (USPACOM) Antiterrorism (AT) Program
(c) UFC 4-020-01 Security Engineering
(d) PDC-TR 12-08 Japanese Construction Standards
(e) USFJI 31-201 Antiterrorism Program
(f) MCO 5530.14A Marine Corps Physical Security Manual
(g) UFC 4-022-02 Selection and Application of Vehicle Barriers
(h) UFC 4-022-03 Security Fences and Gates

Encl: (1) Table 1-1, Supplemental Planning Standoff Distances

1. Purpose. Establish Marine Corps Installations Pacific-MCB Camp Butler (MCIPAC-MCBB) supplemental Antiterrorism (AT) requirements for Design Basis Threat (DBT), AT Standoff distances, Levels of Protection (LOP), and categories of buildings requiring measures beyond minimum AT standards for new construction projects aboard MCIPAC-MCBB installations in Japan in accordance with reference (a).

2. Cancellation. MCIPAC-MCBB Policy Letter 01-19.

3. Background

a. Reference (a) establishes minimum engineering standards not associated with an identified DBT and tasks Installation Commanders, Antiterrorism Officers (ATO), and Threat Working Groups (TWG) to determine a local DBT as the first step for planning AT requirements for new construction. Regional, Japan, and installation level DBT are established and are periodically reviewed at Indo-Pacific Command (INDOPACOM), United States Forces Japan (USFJ), and Marine Corps Bases Camp Butler (MCBB). The INDOPACOM minimum DBT is mandated for all INDOPACOM theater construction projects.

b. Installation Master Plans shall incorporate INDOPACOM directed DBT for facilities. Site planning will include AT standoff distances listed in enclosure (1) from base perimeters and Entry Control Facilities (ECF). Master plans shall consider site placement of main utilities, vantage points for adversaries, high population areas, and the location of high value assets against Installation AT plans.

c. Physical Security requirements for construction are not affected by the publication of reference (a).

d. MCIPAC-MCBB shall use the DBT stated in reference (b) for construction projects aboard Marine Corps Installations in Japan. The following engineering requirements shall be applied to new construction projects.

4. Action

a. Levels of Protection. The following types of facilities shall be evaluated against the DBT specified in reference (b) and afforded the subsequent LOP:

(1) Mass Gathering Building. Buildings or occupied portions of buildings in which the minimum occupied area is 4,000 square meters or greater, is routinely occupied by 200 or more DOD personnel, and with a population density of one person per 40 gross square meters or greater.

(a) Buildings that meet these criteria will, as a minimum, be afforded a Low LOP.

(b) Standoff distances will be in accordance with Explosives Weights I and II and shall be applied to master planning and site placement. Standoff distance refinement shall be completed in project criteria development and design criteria using references (a), (c), (d) and enclosure (1).

(2) Standard Building. All facilities that do not meet the definition of a Mass Gathering Building, such as Inhabited Buildings and High Occupancy Family Housing, shall comply with the minimum requirements listed in reference (a).

b. Design Basis Threat. Terrorist threats addressed in reference (a) are assumed by DOD to be directed against DOD personnel. In accordance with references (b) and (e), MCIPAC-MCBB installations in Japan will use two distinct explosive weights associated with a potential stationary or moving Vehicle-Borne Improvised Explosive Device (VBIED). Specific explosive weights are exempt from mandatory disclosure under the Freedom of Information Act and shall be controlled as For Official Use Only (FOUO) level information.

Explosive weights may be considered classified information when associated with a specific facility as required by a classification authority.

(1) Explosive Weight I applies to all Mass Gathering Buildings as measured from the controlled perimeter fence as depicted in enclosure (1).

(2) Explosive Weight II applies to all Mass Gathering Buildings as measured from all roads and parking within the controlled perimeter as depicted in enclosure (1).

c. For buildings that require AT standoff for Explosive Weight II, standoff distance will be enforced with vehicle barriers that are man-made, natural, landscaping features, or a combination of these. This includes barriers to control access to maintenance and emergency roads within standoff distances. Consult references (f), (g), and (h) for more information on vehicle barriers.

d. Facility planners will consult with Installation Antiterrorism Officers (ATO) to ensure barrier plans are considered in the planning phase of a new project. This ensures requirements, such as parking, are not restricted by vehicle barriers or other security equipment deployed by the Installation at higher force protection conditions or threat levels.

6. Applicability. This policy letter applies to all new construction projects aboard US Marine Corps Installations, Camps, Stations, and facilities in Japan. Other construction projects that are renovations or building additions will be planned in accordance with references (a) and (d).

P. M. DAWSON
Chief of Staff

DISTRIBUTION: List B

MCIPAC Supplement Standoff Distances for New Buildings

Table 1-1, Supplement Planning Standoff Distances

	$CCSD_I$	$CCSD_{II}$
Mass Gathering Building (LLOP)	47 m (155 ft)	20 m (66 ft)

CCSD: Conventional construction standoff distance, as defined in UFC 4-010-01. Conventional construction is based on locally designed and constructed facilities following local (Japan) and international building laws.

Standoff is based on UFC 4-010-01 laminated windows: single-pane 2 sheets of 3mm annealed glass with 0.75mm polyvinyl-butyral (PVB) inner layer.

All measurements shown in feet "()" are rounded up. All standoff distances were calculated in meters.

Figure 1-1, AT Planning Criteria Example

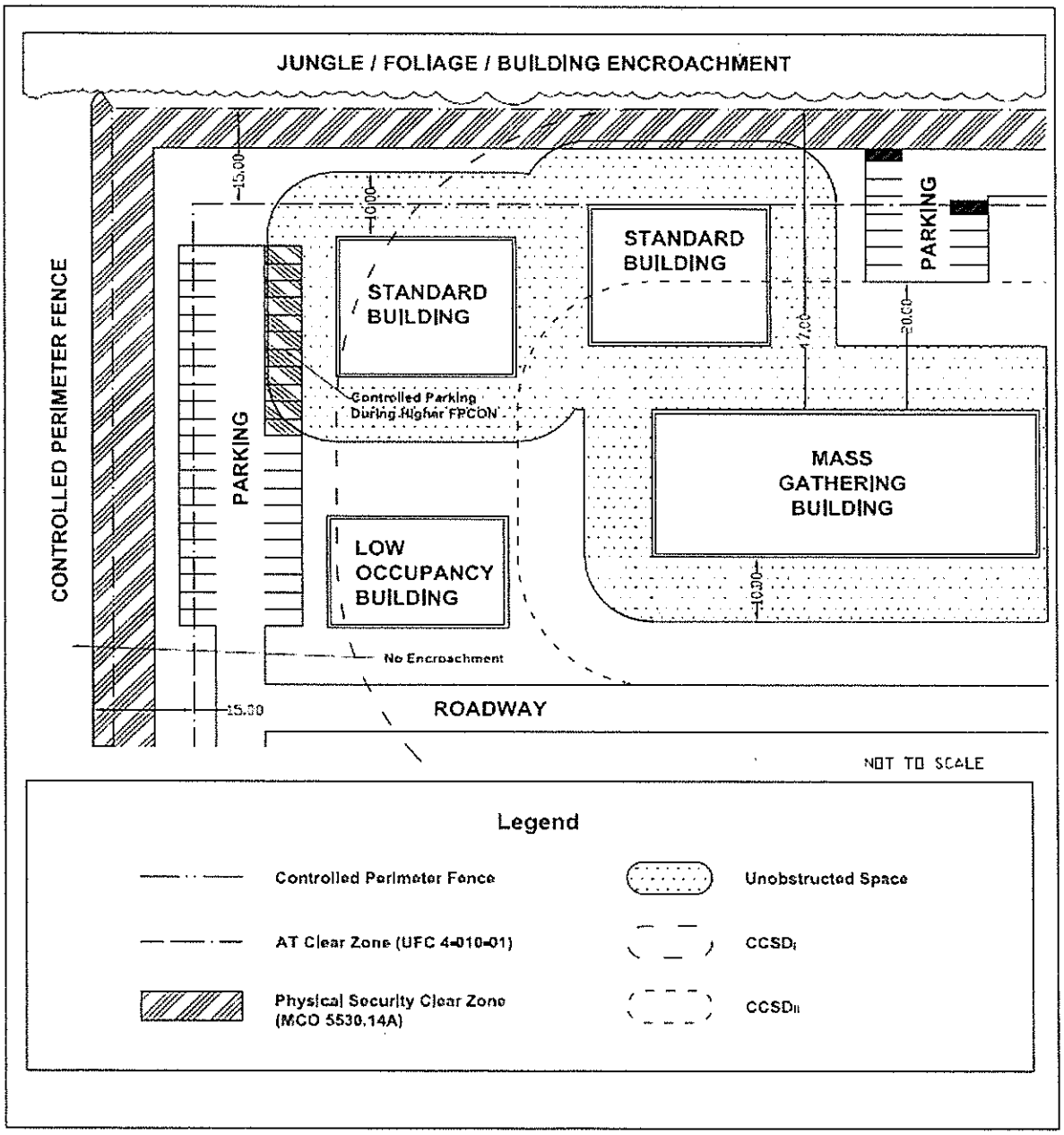

Enclosure (1)

US Army Corps of Engineers®

PDC-TR 12-08 - Rev 3
22 February 2018

PROTECTIVE DESIGN CENTER
TECHNICAL REPORT

STANDOFF DISTANCES FOR JAPANESE CONVENTIONAL CONSTRUCTION

Prepared for
U.S. Army Corps of Engineers
Japan Engineer District

DISTRIBUTION STATEMENT A:
Approved for public release; distribution unlimited

This page intentionally left blank.

FOREWORD

The Government of Japan (GOJ) funds construction of certain U.S. Department of Defense (DoD) buildings in Japan. When these DoD buildings are inhabited, the requirements of UFC 4-010-01[1] are mandatory. Meeting the UFC 4-010-01 requirement significantly impacts the standoff distances (separation from the building to parking, roadways, and installation perimeter) required, construction, and fenestration.

While UFC 4-010-01 and PDC-TR 10-01[2] provide information on conventional construction, i.e., construction that would be used in the absence of the UFC 4-010-01 requirements, the construction is more representative of that in the contiguous United States (CONUS). The differences between CONUS conventional construction and conventional construction in Japan can lead to challenges in ensuring that the requirements of UFC 4-010-01 are effectively and efficiently satisfied.

The U.S. Army Corps of Engineers (USACE) Japan Engineer District (JED) requested that USACE Protective Design Center (PDC) provide information specific to typical construction used for DoD building in Japan as it relates to meeting the requirements of UFC 4-010-01. Typical construction of DoD buildings in Japan uses reinforced concrete structural components and laminated glass windows.

This is a new document that supersedes PDC-TR 07-02[3]in its entirety. As with the original document, and subsequent revisions, this revision provides required minimum standoff distances for construction and windows typically used in Japan, which will achieve the protection requirements from UFC 4-010-01. Revisions have been driven by changes in criteria, changes in typical construction used in Japan, and improvements to analytical tools.

For this report, the JED provided a matrix of twenty four windows sizes and nine glazing layups. The PDC determined the standoff distance required to achieve low and very low, levels of protection (LOP) as defined in UFC 4-010-01 for both Explosive Weights I and II as defined in UFC 4-010-02[4]. The PDC also determined standoff distances required for a low and Very Low LOP, for both Explosive Weights I and II, for a revised matrix of reinforced concrete structural components identified by JED as commonly used in Japan.

The information provided will assist in determining if the protection requirements of UFC 4-010-01 are being provided in an effective and efficient manner. Facilities of different construction and facilities that must provide protection from threats greater than those in UFC 4-010-01 must be specifically analyzed.

---

[1] Unified Facility Criteria (UFC) 4-010-01, *DoD Minimum Antiterrorism Standards for Buildings,* 1 October 2013, http://dod.wbdg.org/

[2] Protective Design Center Technical Report (PDC-TR) 10-01, *Conventional Construction Standoff Distances of the Low and Very Low Levels of Protection IAW UFC 4-010-01*, https://pdc.usace.army.mil/

[3] Protective Design Center Technical Report (PDC-TR) 07-02, *Standoff Distances for Standard Facilities Constructed in Japan*, https://pdc.usace.army.mil/

[4] Unified Facility Criteria (UFC) 4-010-02, *DoD Minimum Antiterrorism Standoff Distances For Buildings*, , 1 October 2013, http://dod.wbdg.org/

This page intentionally left blank.

CONTENTS

Page
FOREWORD I
CONTENTS III
TABLES III
FIGURES III
SECTION 1 – INTRODUCTION 1
1-1 Background 1
1-2 Purpose and Scope 1
1-3 Applicability 2
1-4 References 2
1-5 Relationship to Other Requirements 3
1-6 Conventional Explosive Effects Considered 3
1-7 Determining Applicable Level of Protection and Explosive Weight 3
1-8 Changes in Revision 3 3
SECTION 2 – STRUCTURAL COMPONENTS 5
2-1 General 5
2-2 Components Examined 5
2-3 Methodology 5
2-4 Results and Conclusions 6
SECTION 3 – DOORS AND FENESTRATION 7
3-1 General 7
3-2 Doors… 7
3-3 Windows 7
3-3.1 General 7
3-3.2 Methodology 11
3-3.3 Results 13
APPENDIX A – WINDOW GEOMETRIES 32
APPENDIX B – STANDOFF CALCULATION PROCEDURE FOR OPERABLE WINDOWS 33
APPENDIX C – EXTERIOR DOOR STANDARDS 34

TABLES

Page
Table 1 – Structural Components Considered (Reinforced Concrete) 5
Table 2 - Required Minimum Standoff Distances for Structural Components* 6
Table 3 – Glazing Layups Considered 9
Table 4 – Window Geometry 10
Table 5 – Single Pane Glazing Layup 1[1] 14
Table 6 – Single Pane Glazing Layup 2[1] 16
Table 7 – IGU Glazing Layup 3[1] 18
Table 8 – IGU Glazing Layup 4[1] 20
Table 9 – IGU Glazing Layup 5[1] 22
Table 10 – IGU Glazing Layup 6[1] 24
Table 11 – IGU Glazing Layup 7[1] 26
Table 12 – IGU Glazing Layup 8[1] 28
Table 13 – IGU Glazing Layup 9[1] 30

FIGURES

Page
Figure 1 – Insulated Glazing Unit (IGU) Construction 7
Figure 2 – Single Pane IGU (Numbers indicate glass edges) 8
Figure 3 - Double Pane IGU (Numbers indicate glass edges) 8
Figure 4 – Glazing LOP - Hazard Level Correlation 11
Figure 5 – Window Definitions 13

This page intentionally left blank.

SECTION 1 – INTRODUCTION

1-1 Background

The Government of Japan (GOJ) funds construction of certain U.S. Department of Defense (DoD) buildings in Japan. When these DoD buildings are inhabited, the requirements of UFC 4-010-01 are mandatory. Meeting the UFC 4-010-01 requirements significantly impacts the standoff distances (separation from the building to parking, roadways, and installation perimeter) required, construction, and fenestration.

While UFC 4-010-01 and PDC-TR 10-01 provide information on conventional construction, i.e., construction that would be used in the absence of the UFC 4-010-01 requirements, the construction is more representative of that in the contiguous United States (CONUS). The differences between CONUS conventional construction and conventional construction in Japan can lead to challenges in ensuring that the requirements of UFC 4-010-01 are effectively and efficiently satisfied.

The U.S. Army Corps of Engineers (USACE) Japan Engineer District (JED) requested that USACE Protective Design Center (PDC) provide information specific to typical construction used for DoD building in Japan as it relates to meeting the requirements of UFC 4-010-01. Typical construction of DoD buildings in Japan uses reinforced concrete structural components and laminated glass windows.

1-2 Purpose and Scope

This is a new document that supersedes PDC-TR 07-02 in its entirety. As with the original document, and subsequent revisions, this report provides required standoff distances for protection requirements from UFC 4-010-01 for construction and windows typically used in Japan. Revisions have been driven by changes in criteria, changes in typical construction used in Japan, and improvements to analytical tools.

For this revision, the JED provided a matrix of twenty-four windows sizes and nine glazing layups. The PDC determined the standoff distance required to achieve a Low and Very Low Level of Protection (LOP) as defined in UFC 4-010-01 for both Explosive Weights I and II as defined in UFC 4-010-02. The PDC also determined standoff distances required for a low and Very Low LOP, for both Explosive Weights I and II, for a revised matrix of reinforced concrete structural components commonly used in Japan as identified by JED.

Section 2 of this document provides information on the required standoff distances for structural components. Section 3 provides information on the required standoff distances for fenestration. The information provided will assist in determining if the protection requirements of UFC 4-010-01 are being provided in an effective and efficient manner.

This report does not address any requirements related to conventional loads (e.g., seismic, wind, live, dead). The adequacy of structural components and windows to resist these loads is the responsibility of the Engineer of Record for the design.

1-3 Applicability

The information in this report is for use with facilities required to meet the UFC 4-010-01 requirements and whose windows and construction fall within the limits of those detailed in this report. Facilities of different construction and facilities that must provide protection from threats greater than those in UFC 4-010-01 must be analyzed for the construction provided and/or the identified threats. This report is a tool for engineers and architects with experience and knowledge of antiterrorism standards and blast effects. It should not be used without complete understanding of its results and limitations.

1-4 References

The following references are cited in this report by designation only.

- ASTM Standard E1300, *Standard Practice for Determining Load Resistance of Glass in Buildings,* 2016, http://www.astm.org/
- ASTM Standard F1642, *Standard Test Method for Glazing and Glazing Systems Subject to Airblast Loadings,* 2016, http://www.astm.org/
- ASTM Standard F2912, *Standard Specification for Glazing and Glazing Systems Subject to Airblast Loadings,* 2017, http://www.astm.org/
- ASTM Standard F2247, *Standard Test Method for Metal Doors Used in Blast Resistant Applications,* 2011, http://www.astm.org/
- ASTM Standard F2248, *Standard Practice for Specifying an Equivalent 3-Second Duration Design Loading for Blast Resistant Glazing Fabricated with Laminated Glass,* 2012, http://www.astm.org/
- Glass Association of North America (GANA) Glazing Manual, 2011, http://www.glasswebsite.com/
- Protective Design Center Technical Report (PDC-TR) 10-01, *Conventional Construction Standoff Distances of the Low and Very Low Levels of Protection IAW UFC 4-010-01*, https://pdc.usace.army.mil/
- Protective Design Center Technical Report (PDC-TR) 06-08, Rev. 1, *Single Degree of Freedom Structural Response Limits for Antiterrorism Design*, https://pdc.usace.army.mil/
- Protective Design Center Technical Report (PDC-TR) 07-02, *Standoff Distances for Standard Japan Facilities Improvement Program Construction (Structures and Windows)*, https://pdc.usace.army.mil/
- Protective Design Center Technical Report (PDC-TR) 06-01, *Methodology Manual for the Single-Degree-of-Freedom Blast Effects Design Spreadsheets (SBEDS)*, https://pdc.usace.army.mil/
- Protective Design Center Technical Report (PDC-TR) 12-01, *Methodology Manual for the SBEDS-W Window Analysis Spreadsheet*, 2014, https://pdc.usace.army.mil/
- *Single-Degree-of-Freedom Blast Effects Design Spreadsheets (SBEDS) version 4.2*, USACE Protective Design Center https://pdc.usace.army.mil/
- *Single-Degree-of-Freedom Blast Effects Design Spreadsheets – Windows (SBEDS-W) version 1.0*, USACE Protective Design Center https://pdc.usace.army.mil/

- Unified Facility Criteria (UFC) 4-010-01, *DoD Minimum Antiterrorism Standards for Buildings,* 1 October 2013, http://dod.wbdg.org/
- Unified Facility Criteria (UFC) 4-010-02, *DoD Minimum Antiterrorism Standoff Distances For Buildings,* 1 October 2013, https://pdc.usace.army.mil/
- Unified Facility Criteria (UFC) 4-020-01, *DoD Security Engineering Facilities Planning Manual,* 11 September 2008, http://dod.wbdg.org/
- Unified Facilities Guide Specifications (UFGS) 08 51 13, *Aluminum Windows,* 1 May 2011, http://dod.wbdg.org/

1-5 Relationship to Other Requirements

This document is intended to supersede only PDC-TR 07-02 and is not intended to supersede, nor lessen, any other requirements. In the case of conflicts between this PDC-TR and other applicable criteria, the more stringent requirement shall control.

1-6 Conventional Explosive Effects Considered

Detonation of a conventional explosive device results in a release of energy that occurs so rapidly that there is a local accumulation of energy at the site of the explosion. The accumulated energy dissipates violently through blast waves, propulsion of fragments, and thermal radiation. Depending on the configuration and location of the device, the released energy may cause a pressure wave in air (airblast), groundshock, fragmentation, cratering, thermal radiation, or any combination of these effects.

For terrorist conventional explosive devices considered in UFC 4-010-01, airblast is the primary effect considered in design of structures. The required standoff distances presented in this report are based on airblast requirements.

1-7 Determining Applicable Level of Protection and Explosive Weight

All buildings meeting the definition in UFC 4-010-01 for ‘inhabited building’ require at a minimum a Very Low LOP. Buildings meeting the definition in UFC 4-010-01 for ‘billeting’, ‘high occupancy family housing’, or ‘primary gathering buildings’ require a Low LOP. Descriptions of the expected damage associated with these LOP are found in Table 2-1 and Table 2-2 of UFC 4-010-01.

The applicable Explosive Weight to use is dependent on whether the installation has a controlled perimeter as defined in UFC 4-010-01. Explosive Weight I, as defined in UFC 4-010-02, is associated with charges detonated at a controlled perimeter. Explosive Weight II, as defined in UFC 4-010-02, is associated with charges detonated in parking areas and roadways if the installation has a controlled perimeter. If an installation lacks a controlled perimeter, detonation of Explosive Weight I should be considered in parking areas and roadways. Unobstructed space, as defined in UFC 4-010-01, extends to the parking, roadways, and trash containers.

1-8 Changes in Revision 3

Revision 3 adds ranges of geometry and reinforcing to the structural components, adds glazing layups, changes the window geometries, defines unobstructed space, clarifies load bearing components, defines the maximum anchor spacing, removes the in-plane load discussion, and non-conforming window procedure.

This page intentionally left blank.

SECTION 2 – STRUCTURAL COMPONENTS

2-1 General

The PDC examined the typical structural components identified by JED to determine minimum required standoff distance for structural components. Standoff distances for Low and Very Low LOP, for both Explosive Weights I and II, are determined as discussed below.

2-2 Components Examined

The components shown in Table 1 were identified by JED as typical construction for DoD facilities in Japan.

As specified by JED, for all components:

- 21 MPa was used for static compressive strength of concrete.
- 295 MPa was used for reinforcing static yield strength.
- 440 MPa was used for reinforcing static ultimate strength.

Table 1 – Structural Components Considered (Reinforced Concrete)

Component	Sections (mm)	Spans (m)	Reinforcing Ratio or Reinforcing	Support Condition
Column	600 x 600 700 x 700 800 x 800	3.5 - 6[1]	0.006 - 0.019	Fixed - Simple Fixed - Fixed
Girder	350 x 950 400 x 1400	8 - 12	0.006 – 0.020	Fixed - Fixed
Roof Beam	350 x 650 450 x 900	4.5 - 6.5	0.004 – 0.017	Fixed - Fixed
Wall[1]	150 to 200	3.4 - 10	D10, 150 mm each way in middle of wall	One and two way, all fixed or simple
Roof Slab	130 to 200	3 - 3.5	D10, 200 mm each way at top and bottom of slab	Fixed - Fixed

1 - Clear height of the column
2 - Walls are assumed to be between the range of nonload-bearing (2,919 N/m of vertical load, not including the weight of wall) as defined by the 2015 International Building Code and supporting a vertical load of 29,190 N/m.

2-3 Methodology

To determine the required minimum standoff distance, information contained in previous versions of PDC-TR 07-02 and PDC-TR 10-01 were first investigated. The required standoff distance for many of the components identified in Table 1 could be found in these two documents. For components not contained in these documents, SBEDS v4.2 and PDC-TR 06-08 were used to determine the required standoff distances to achieve the required LOP. The component response due to airblast loads was determined using SBEDS and the response limits from PDC-TR 06-08 were used to determine the expected LOP. PDC-TR 06-01 recommended increase factors for average strength and dynamic effects were applied to the static strengths identified by JED. Any components not falling with in the dimensions specified in Table 1 should be analyzed dynamically to determine the component adequacy.

2-4 Results and Conclusions

Table 2 contains the required minimum standoff distances for Low LOP and Very Low LOP, for both Explosive Weights I and II, for reinforced concrete structural components common for DoD facilities in Japan (see Table 1). The values presented in Table 2 are based on review of previous versions of PDC-TR 07-02, PDC-TR 10-01, and SBEDS analyses of components not found in these two documents.

The distances given in Table 2 assume fully reflected blast loading. If the pressure is not fully reflected, analysis may show lesser standoff required because side-on pressures will usually dominate the response instead of reflected pressures. However, in no case use standoffs less than the minimum standoffs specified in UFC 4-010-01.

Table 2 - Required Minimum Standoff Distances for Structural Components*

Explosive Weight	Required Minimum Standoff Distance (m)	
	Low LOP	Very Low LOP
I	8	6
II	4	4

* - distance given assume fully reflected loading (i.e., a line of sight exists from the charge to the component.)

Before applying the standoff distance in Table 2, verify that the structural components are commensurate with those in Table 1 and that the required minimum standoff for windows (see Section 3) is not greater than those in Table 2.

These minimum standoffs include only the wall, column, beam, and roof components. The controlling component of the standoff is generally the doors and windows. These components are addressed in Section 3.

Facilities of different construction than identified in Table 1, facilities that must provide protection from an identified threat or facilities required to provide a higher LOP than those in UFC 4-010-01 must be specifically analyzed.

SECTION 3 – DOORS AND FENESTRATION

3-1 General

In this section, the alternate design strategy for exterior doors, or the interior doors in a vestibule or foyer type arrangement, is discussed along with the required minimum standoff distances for a matrix of window sizes and glazing layups.

3-2 Doors

See Appendix for the standards that apply to door layout and selection.

3-3 Windows

3-3.1 General

The JED specified nine glazing layups (see Table 3) and twenty-four window geometries (see Table 4) commonly used for DoD facilities in Japan. The windows have aluminum frames and mullions with a minimum yield strength of 110 MPa. For each of the geometries, the required minimum standoff distance for each of the glazing systems was investigated. As with the structural components, the required minimum standoff distances assume a fully reflected blast loading. The rough opening is the opening in the wall that the window system will be framed into.

The operable glazing systems provided by JED are rated for a Design Pressure (DP) of 3.6 kPa for Windows 6 to 12. Figure 1 includes definitions for glazing system components.

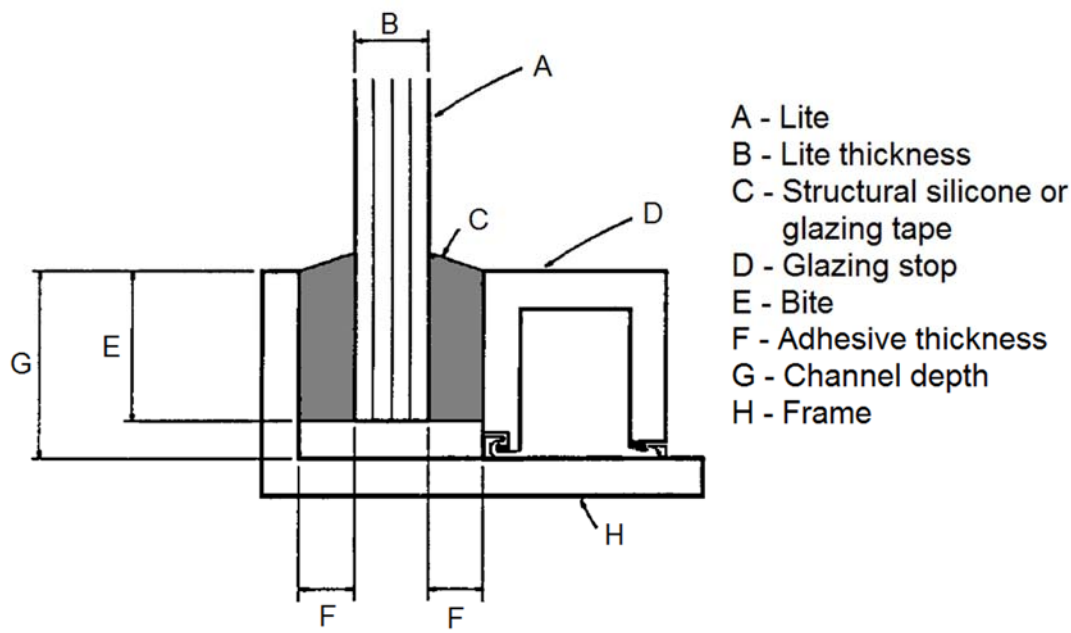

Figure 1 – Insulated Glazing Unit (IGU) Construction

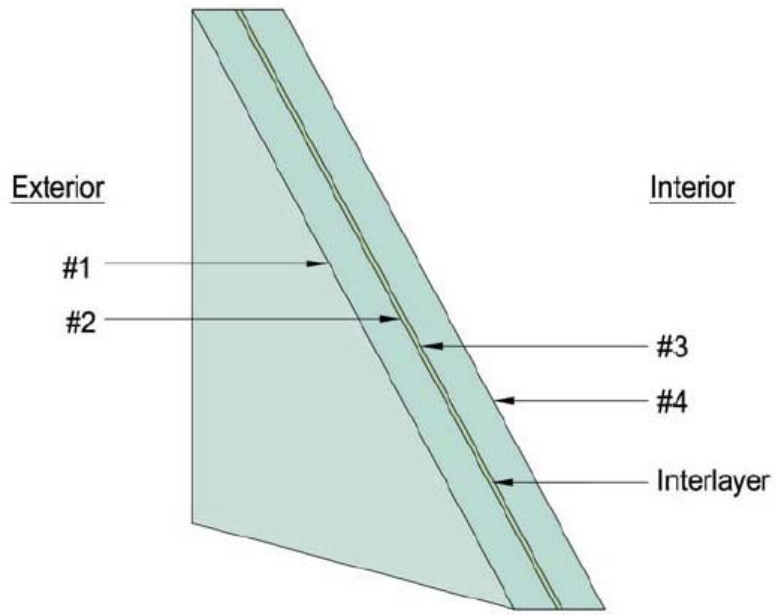

Figure 2 – Single Pane IGU (Numbers indicate glass edges)

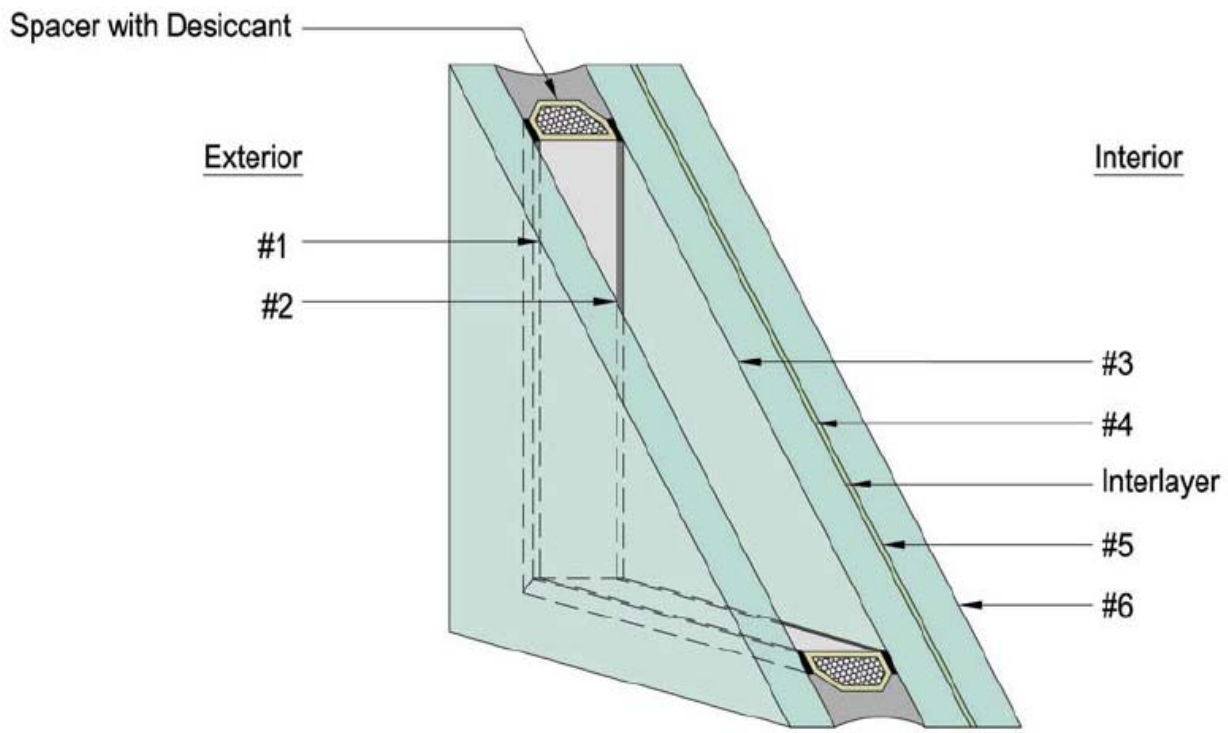

Figure 3 - Double Pane IGU (Numbers indicate glass edges)

Table 3 – Glazing Layups Considered

Layup Number	Layup[1]	Required Minimum Standoff	Silicone Tensile Strength[5] (MPa)
1	Single pane, 6-mm (0.76) laminate[2]	See Table 5	1
2	Single pane, 6-mm (1.52) laminate[2]	See Table 6	1.7
3	IGU[3], 3-mm monolithic + air gap[4] + 6-mm (0.76) laminate	See Table 7	1.7
4	IGU[3], 3-mm monolithic + air gap[4] + 6-mm (1.52) laminate	See Table 8	1.7
5	IGU[3], 5-mm monolithic + air gap[4] + 6-mm (0.76) laminate	See Table 9	1.7
6	IGU[3], 5-mm monolithic + air gap[4] + 6-mm (1.52) laminate	See Table 10	1.7
7	IGU[3], 5-mm monolithic + air gap[4] + 6-mm (2.28) laminate	See Table 11	1.7
8	IGU[3], 6-mm monolithic + air gap[4] + 6-mm (0.76) laminate	See Table 12	1.7
9	IGU[3], 6-mm monolithic + air gap[4] + 6-mm (1.52) laminate	See Table 13	1.7

1 - Number in parentheses is the PVB inner layer (24 MPa strength) thickness in mm for laminated pane.

2 - Glazing is anchored to the frame w/ structural silicon beads on all four edges, both faces.

3 - Insulated glazing unit (IGU) with a laminated pane on interior side of unit and anchored to frame with structural silicon bead on all four edges, interior face only.

4 - 6 and 12-mm air gaps were analyzed.

5 - Structural silicone bead minimum width is 9.5-mm and the minimum thickness is 5-mm.

Table 4 – Window Geometry

Window Number	Rough Opening		Number of Sashes	Sash Width[1] (m)	Height of Sill Above Floor (m)	Minimum Mullion Moment of Inertia (mm^4)	Frame Design Pressure (kPa)	Structural Test Pressure (kPa)	Static Reaction Load (kPa)
	Height (m)	Width (m)							
1	0.60	0.30	1	0.30	1.50	-[3]	-[3]	-[3]	-[3]
2	0.60	0.45	1	0.45	1.50	-[3]	-[3]	-[3]	-[3]
3	0.60	0.60	1	0.60	1.50	-[3]	-[3]	-[3]	-[3]
4	0.90	0.60	1	0.60	1.20	-[3]	-[3]	-[3]	-[3]
5	0.90	0.90	1	0.90	1.20	-[3]	-[3]	-[3]	-[3]
6	0.90	1.20	2	0.60	1.20	23,700	3.6	5.4	10.8
7	1.20	1.20	2	0.60	1.10	70,300	3.6	5.4	10.8
8	1.20	1.50	2	0.75	1.10	87,900	3.6	5.4	10.8
9	1.20	1.80	2	0.90	1.10	106,000	3.6	5.4	10.8
10	1.60	1.80	2	0.90	1.10	291,400	3.6	5.4	10.8
11	2.10	1.80	2	0.90	0.00	738,000	3.6	5.4	10.8
12	2.10	2.10	2	1.05	0.00	861,000	3.6	5.4	10.8
13	1.20	1.20	1	1.20	0.90	-[3]	-[3]	-[3]	-[3]
14	1.50	1.50	1	1.50	0.60	-[3]	-[3]	-[3]	-[3]
15	1.80	1.80	1	1.80	0.30	-[3]	-[3]	-[3]	-[3]
16-a	0.60	1.80	2	0.90	2.10	7,900	3.6	5.4	10.8
16-b	0.60	1.80	2	0.90	3.00	7,900	3.6	5.4	10.8
16-c	0.60	1.80	2	0.90	4.00	7,900	3.6	5.4	10.8
17-a	0.60	1.20	2	0.60	2.10	5,300	3.6	5.4	10.8
17-b	0.60	1.50	2	0.75	2.10	6,600	3.6	5.4	10.8
17-c	0.60	1.80	2	0.90	2.10	7,900	3.6	5.4	10.8
18-a	0.60	1.20	1	1.20	2.40	10,600	3.6	5.4	10.8
18-b	0.60	1.50	1	1.50	2.40	13,200	3.6	5.4	10.8
18-c	0.60	1.80	1	1.80	2.40	15,800	3.6	5.4	10.8

1 - Sash height equal to rough opening height.

2 – See Appendix A for window geometries drawings.

3 - Not applicable for single sash windows.

3-3.2 Methodology

UFC 4-010-01 allows both static and dynamic analyses of windows systems (i.e., glazing, framing members, and anchorage). To determine the minimum standoffs required for the Low LOP and Very Low LOP, a dynamic approach using the SBEDS-W software is used for the glazing. The default material properties from SBEDS-W, as described in PDC-TR 12-01, were used.

The correlation between levels of protection and the glazing hazard ratings from ASTM F2912-17 is given in Figure 4. Laminated windows have a tendency to fail suddenly when they disengage from the frame. As the standoff distance is reduced, a window may go from a Medium LOP to a Very Low LOP without an intermediate standoff that results in a Low LOP. For certain geometries and glazing layups, not having a standoff associated with Low LOP and Very Low LOP would not be unexpected. In the tables below, if a Low, or Very Low, LOP was not attainable, the standoff associated with a Medium LOP is reported. If a Medium LOP is reported for the lite (Note 3 in Tables 5-13), the window can be used at any sill height due to the glass remaining in the frame.

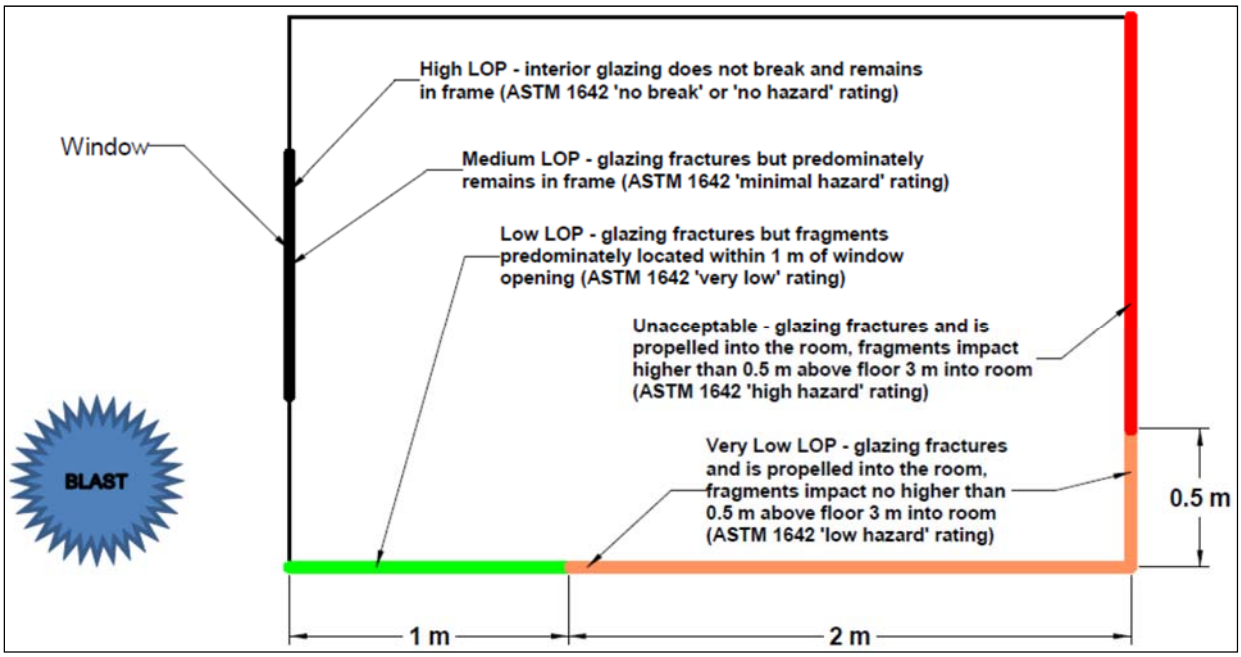

Figure 4 – Glazing LOP - Hazard Level Correlation

To analyze operable windows in SBEDS-W, a boundary condition requirement is that the frame seats in the opening formed by the mullions, so the supports can be assumed to be pinned. Both panes of the double sash operable windows and the frames, mullions and tracks of the windows specified by JED were assumed to be controlled by the low bearing capacity of the mullion. For Windows 6-12, a static procedure based on ASTM F2248 was used to determine the applicable standoff. The procedure is described in detail later in this section. Dynamic analyses were conducted on the double sash operable window lites assuming the frame would not fail. The mullions were calculated to have higher required standoff distances than the lites. Therefore, the lites would not control the standoff for the glazing system and the frame standoffs were used.

The design of the window frame members, connection of the frame members to the supporting structural elements (SSE) and the SSE are dependent on the static equivalent out-of-plane window reactions. The out-of-plane reaction is an equivalent static reaction load equal to the maximum window resistance multiplied by the window area and divided by the total supported length connected to the SSE along the window perimeter and is determined using SBEDS-W or Equation 5 shown in Appendix B The maximum resistance for the dynamic analysis is based on the largest of the maximum resistance from the glass response or the post break membrane response based on analysis using SBEDS-W. The maximum resistance for the static analysis was based on a rated Design Pressure (DP) in accordance with UFGS 08 51 13 and the static procedure described below.

The design pressures were multiplied by a factor of 1.5 to determine the Structural Test Pressure (STP) in accordance with UFGS 08 51 13 and AAMA/WDMA/CSA 101/I.S.2/A4411. The STP was considered equal to the load resistance (LR) of the window system and ASTM F2248 was used to find the corresponding standoffs. The STP was multiplied by a factor of 2 to determine the out-of-plane reaction, according to ASTM F2248. The minimum moments of inertia of the mullions shown in Table 4 satisfy the required L/60 deflection criteria. Since the frame is also subject to 150% of the design load and must remain operable, the extra capacity can be used to reduce the standoff of the operable windows. Twice the structural load should be used to design the connection to the supporting structural elements as a safety factor from the conversion from a static pressure to a dynamic pressure. The ASTM procedure provides a Medium LOP but can be conservatively used for Very Low LOP and Low LOP buildings as well.

When mullions are provided with DPs other than 3.6 kPa for Windows 6 through 12 and 16 through 18, use the equations shown in Appendix B to determine the corresponding standoff, out-of-plane reactions. Also, verify that the mullion will meet the L/60 deflection criteria when loaded with 2 times the STP.

The maximum anchor spacing was assumed to be 400 mm. This spacing will allow the use of any frame member due to the small span between the anchors. Also, an additional anchor should be placed at the top and bottom of each mullion to support the concentrated load.

ASTM F2248 was used to determine the required silicone geometry. This practice sets the depth of the structural silicone sealant bead to be at least equal to the larger of approximately 9.5mm or the thickness designation of the glass to which it adheres but not larger than two times the thickness designation of the glass to which it adheres. The minimum thickness of the structural silicone bead shall be 5mm.

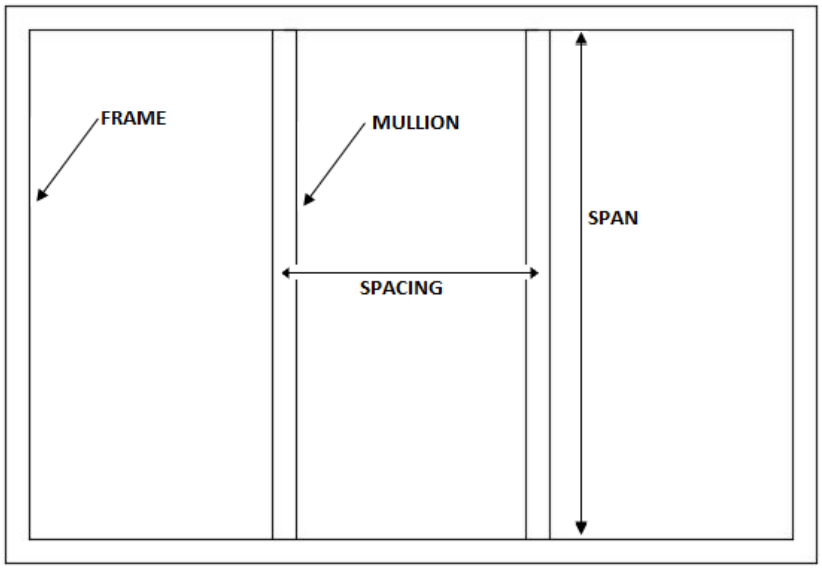

Figure 5 – Window Definitions

3-3.3 Results

The minimum required standoff distances and out-of-plane reactions are contained in Table 5 through Table 13. Each table is for one of the nine glazing layups shown in Table 3 and addresses all twenty four of the window geometries shown in Table 4.

Table 5 – Single Pane Glazing Layup 1[1]

Window Number[2]	Level of Protection	Explosive Weight I		Explosive Weight II	
		Required Standoff (m)	Out-of-Plane Reaction (N/mm)	Required Standoff (m)	Out-of-Plane Reaction (N/mm)
1	Low	32[3]	6.4	17[3]	6.5
	Very Low	30	6.4	15	6.7
2	Low	31[3]	8.0	16[3]	7.8
	Very Low	30	8.2	15	8.1
3	Low	26[3]	12.6	13[3]	12.9
	Very Low	25	13.1	-[4]	-[4]
4	Low	38[3]	7.1	18[3]	7.2
	Very Low	35	7.3	17	7.3
5	Low	30[3]	12.5	14[3]	12.8
	Very Low	28	13.0	-[4]	-[4]
6	Low	38[3]	7.1	18[3]	7.2
	Very Low	35	7.3	16	7.3
7	Low	42[3]	6.3	20[3]	6.1
	Very Low	37	6.3	17	6.3
8	Low	41	7.0	20[3]	6.5
	Very Low	37	7.0	-[4]	-[4]
9	Low	39	8.2	18[3]	8.0
	Very Low	36	8.2	17	8.2
10	Low	45	6.6	20[3]	6.5
	Very Low	41	6.6	18	6.6
11	Low	46	6.1	20	6.1
	Very Low	33	6.1	15	6.1
12	Low	47	6.3	20[3]	6.1
	Very Low	36	6.3	15	6.3
13	Low	32[3]	12.8	15[3]	12.3
	Very Low	30	13.1	14	13.1
14	Low	33[3]	13.0	15[3]	12.5
	Very Low	31	13.1	14	13.1
15	Low	34[3]	13.0	15[3]	12.6
	Very Low	32	13.1	14	13.1
16-a	Low	38[3]	7.1	18[3]	7.2
	Very Low	36	7.3	17	7.3
16-b	Low	38[3]	7.1	18[3]	7.2
	Very Low	36	7.3	17	7.3
16-c	Low	38[3]	7.1	18[3]	7.2
	Very Low	37	7.3	-[4]	-[4]

Table 5 – Single Pane Glazing Layup 1[1] (cont.)

Window Number[2]	Level of Protection	Explosive Weight I		Explosive Weight II	
		Required Standoff (m)	Out-of-Plane Reaction (N/mm)	Required Standoff (m)	Out-of-Plane Reaction (N/mm)
17-a	Low	29[5]	2.2	13[5]	2.2
	Very Low	-[4]	-[4]	-[4]	-[4]
17-b	Low	33[3]	8.7	16[3]	8.8
	Very Low	32	8.8	-[4]	-[4]
17-c	Low	38[3]	7.1	18[3]	7.2
	Very Low	36	7.3	17	7.3
18-a	Low	42[3]	6.3	20[3]	6.1
	Very Low	39	6.3	18	6.3
18-b	Low	45[3]	6.0	21[3]	5.9
	Very Low	41	6.1	19	6.1
18-c	Low	46	6.0	21	6.0
	Very Low	43	6.0	20	6.0

1 - See Table 3 for glazing layup description.

2 - See Table 4 for window geometry.

3 - Glazing provides MEDIUM LOP

4 - Level of Protection values overlap, only the highest LOP is shown.

5 - Standoff controlled by operable frame and meets MEDIUM LOP per paragraph 3-3.2.

Table 6 – Single Pane Glazing Layup 2[1]

Window Number[2]	Level of Protection	Explosive Weight I		Explosive Weight II	
		Required Standoff (m)	Out-of-Plane Reaction (N/mm)	Required Standoff (m)	Out-of-Plane Reaction (N/mm)
1	Low	23[3]	11.8	12[3]	12.4
	Very Low	-[4]	-[4]	-[4]	-[4]
2	Low	22[3]	15.8	12[3]	14.9
	Very Low	-[4]	-[4]	11	16.3
3	Low	19[3]	24.2	10[3]	24.1
	Very Low	-[4]	-[4]	-[4]	-[4]
4	Low	26[3]	14.4	13[3]	14.4
	Very Low	-[4]	-[4]	-[4]	-[4]
5	Low	21[3]	25.2	11[3]	23.4
	Very Low	-[4]	-[4]	10	26.1
6	Low	29[5]	2.8	13[5]	2.8
	Very Low	-[4]	-[4]	-[4]	-[4]
7	Low	29[5]	12.6	15[3]	11.6
	Very Low	-[4]	-[4]	14	12.6
8	Low	29[5]	13.8	13[5]	13.6
	Very Low	-[4]	-[4]	-[4]	-[4]
9	Low	29[5]	3.9	13[5]	3.9
	Very Low	-[4]	-[4]	-[4]	-[4]
10	Low	32[3]	13.0	15[3]	12.6
	Very Low	30	13.1	14	13.1
11	Low	33	12.2	15[3]	11.7
	Very Low	29	12.2	13	12.2
12	Low	33[3]	12.5	15	12.6
	Very Low	29	12.6	13	12.6
13	Low	23[3]	24.8	11[3]	24.5
	Very Low	22	26.1	-[4]	-[4]
14	Low	24[3]	25.2	11[3]	25.0
	Very Low	23	26.1	-[4]	-[4]
15	Low	25[3]	25.0	11[3]	25.1
	Very Low	24	26.1	-[4]	-[4]
16-a	Low	29[5]	2.4	13[5]	2.4
	Very Low	-[4]	-[4]	-[4]	-[4]
16-b	Low	29[5]	2.4	13[5]	2.4
	Very Low	-[4]	-[4]	-[4]	-[4]
16-c	Low	29[5]	2.4	13[5]	2.4
	Very Low	-[4]	-[4]	-[4]	-[4]

Table 6 – Single Pane Glazing Layup 2[1] (cont.)

Window Number[2]	Level of Protection	Explosive Weight I		Explosive Weight II	
		Required Standoff (m)	Out-of-Plane Reaction (N/mm)	Required Standoff (m)	Out-of-Plane Reaction (N/mm)
17-a	Low	29[5]	2.2	13[5]	2.2
	Very Low	-[4]	-[4]	-[4]	-[4]
17-b	Low	29[5]	2.3	13[5]	2.3
	Very Low	-[4]	-[4]	-[4]	-[4]
17-c	Low	29[5]	2.4	13[5]	2.4
	Very Low	-[4]	-[4]	-[4]	-[4]
18-a	Low	29[5]	12.6	15[3]	11.6
	Very Low	-[4]	-[4]	14	12.6
18-b	Low	31[3]	12.0	15[3]	12.0
	Very Low	30	12.1	-[4]	-[4]
18-c	Low	32[3]	11.9	16[3]	11.4
	Very Low	31	12.1	15	12.1

1 - See Table 3 for glazing layup description.

2 - See Table 4 for window geometry.

3 - Glazing provides MEDIUM LOP

4 - Level of Protection values overlap, only the highest LOP is shown.

5 - Standoff controlled by operable frame and meets MEDIUM LOP per paragraph 3-3.2.

Table 7 – IGU Glazing Layup 3[1]

Window Number[2]	Level of Protection	Explosive Weight I		Explosive Weight II	
		Required Standoff (m)	Out-of-Plane Reaction (N/mm)	Required Standoff (m)	Out-of-Plane Reaction (N/mm)
1	Low	29[3]	8.7	15[3]	8.3
	Very Low	-[4]	-[4]	14	8.3
2	Low	29[3,6]	8.0	14	7.8
	Very Low	28[6]	8.2	-[4]	-[4]
3	Low	26[3,6]	12.3	12[3]	12.1
	Very Low	24[6]	13.0	-[4]	-[4]
4	Low	34[6]	7.3	16[3]	16.7
	Very Low	32[6]	7.3	14	7.3
5	Low	27[3]	12.7	13[3]	12.1
	Very Low	26	13.1	12	13.1
6	Low	34[3]	7.3	16[3]	6.7
	Very Low	32[6]	7.3	14	7.3
7	Low	37[3]	6.3	17[3]	6.0
	Very Low	33	6.3	15	6.3
8	Low	36[3]	6.8	17[3]	6.5
	Very Low	33	7.0	15	7.0
9	Low	35[3]	8.0	16[3,6]	7.8
	Very Low	32	8.2	15	8.2
10	Low	41[3]	6.5	17[3]	6.4
	Very Low	35	6.6	15	6.6
11	Low	40	6.1	20[7]	6.1
	Very Low	32	6.1	15[7]	6.1
12	Low	47[7]	6.3	21[7]	6.1
	Very Low	36[7]	6.3	20[7]	6.3
13	Low	29[3]	12.7	13[3,7]	12.7
	Very Low	28	13.1	-[4]	-[4]
14	Low	33[3,7]	13.0	15[3,7]	12.5
	Very Low	31[7]	13.1	14[7]	13.1
15	Low	34[3,7]	13.0	15[3,7]	12.6
	Very Low	32[6,7]	13.1	14[7]	13.1
16-a	Low	34[3]	7.1	16[3]	6.7
	Very Low	33[6]	7.3	15	7.3
16-b	Low	34[3]	7.1	16[3]	6.7
	Very Low	33[6]	7.3	15	7.3
16-c	Low	34[3,6]	7.1	16[3]	6.7
	Very Low	-[4]	-[4]	15	7.3

Table 7 – IGU Glazing Layup 3[1] (cont.)

Window Number[2]	Level of Protection	Explosive Weight I		Explosive Weight II	
		Required Standoff (m)	Out-of-Plane Reaction (N/mm)	Required Standoff (m)	Out-of-Plane Reaction (N/mm)
17-a	Low	29[5]	2.2	13[5]	2.2
	Very Low	-[4]	- [4]	-[4]	- [4]
17-b	Low	32[3]	8.7	14[3]	8.6
	Very Low	31[6]	8.8	-[4]	- [4]
17-c	Low	34[3]	7.1	16	6.7
	Very Low	33	7.3	15	7.3
18-a	Low	37[3],[6]	6.3	17[3]	6.0
	Very Low	34	6.3	16[3]	6.3
18-b	Low	39[3]	6.0	18[3]	5.8
	Very Low	35	6.1	16	6.1
18-c	Low	41	6.0	18[3]	5.9
	Very Low	36	6.0	16	6.0

1 - See Table 3 for glazing layup description.

2 - See Table 4 for window geometry.

3 - Glazing provides MEDIUM LOP

4 - Level of Protection values overlap, only the highest LOP is shown.

5 - Standoff controlled by operable frame and meets MEDIUM LOP per paragraph 3-3.2.

6 - Standoff controlled by 12 mm airgap

Table 8 – IGU Glazing Layup 4[1]

Window Number[2]	Level of Protection	Explosive Weight I		Explosive Weight II	
		Required Standoff (m)	Out-of-Plane Reaction (N/mm)	Required Standoff (m)	Out-of-Plane Reaction (N/mm)
1	Low	23[3],[6]	12.4	13[3],[6]	11.5
	Very Low	-[4]	-[4]	12[6]	12.5
2	Low	21[3],[6]	16.0	11[3]	14.3
	Very Low	-[4]	-[4]	-[4]	-[4]
3	Low	18[3],[6]	24.3	10[3],[6]	20.9
	Very Low	-[4]	-[4]	-[4]	-[4]
4	Low	24[3]	14.3	12[3]	13.6
	Very Low	23	14.6	11[3]	14.6
5	Low	21[3],[6]	21.7	10[3]	23.2
	Very Low	-[4]	-[4]	9[3]	26.1
6	Low	29[5]	2.8	13[5]	2.8
	Very Low	-[4]	-[4]	-[4]	-[4]
7	Low	29[5]	3.2	13[5]	3.2
	Very Low	-[4]	-[4]	-[4]	-[4]
8	Low	29[5]	3.6	13[5]	3.6
	Very Low	-[4]	-[4]	-[4]	-[4]
9	Low	29[5]	3.9	13[5]	3.9
	Very Low	-[4]	-[4]	-[4]	-[4]
10	Low	29[3]	12.8	13[5]	4.6
	Very Low	-[4]	-[4]	-[4]	-[4]
11	Low	31[3]	12.1	15[3],[7]	11.7
	Very Low	29[5]	5.2	13[7]	12.2
12	Low	35[3],[7]	12.5	15	12.6
	Very Low	29[7]	12.6	13[5],[7]	12.6
13	Low	21[3]	26.0	10[3],[7]	24.7
	Very Low	-[4]	-[4]	-[4]	-[4]
14	Low	24[3],[7]	25.2	11[3],[7]	25.0
	Very Low	23[7]	26.1	-[4]	-[4]
15	Low	25[3],[7]	25.0	11[3],[7]	25.1
	Very Low	24[7]	26.1	-[4]	-[4]
16-a	Low	29[5]	2.4	13[5]	2.4
	Very Low	-[4]	-[4]	-[4]	-[4]
16-b	Low	29[5]	2.4	13[5]	2.4
	Very Low	-[4]	-[4]	-[4]	-[4]
16-c	Low	29[5]	2.4	13[5]	2.4
	Very Low	-[4]	-[4]	-[4]	-[4]

Table 8 – IGU Glazing Layup 4[1] (cont.)

Window Number[2]	Level of Protection	Explosive Weight I		Explosive Weight II	
		Required Standoff (m)	Out-of-Plane Reaction (N/mm)	Required Standoff (m)	Out-of-Plane Reaction (N/mm)
17-a	Low	29[5]	2.2	13[5]	2.2
	Very Low	-[4]	- [4]	-[4]	- [4]
17-b	Low	29[5]	2.3	13[5]	2.3
	Very Low	-[4]	- [4]	-[4]	- [4]
17-c	Low	29[5]	2.4	13[5]	2.4
	Very Low	-[4]	- [4]	-[4]	- [4]
18-a	Low	29[5]	2.2	13[5]	2.2
	Very Low	-[4]	- [4]	-[4]	- [4]
18-b	Low	29[5]	2.3	14[3]	11.0
	Very Low	-[4]	- [4]	-[4]	- [4]
18-c	Low	29[3]	11.9	14[3]	11.2
	Very Low	-[4]	- [4]	-[4]	- [4]

1 - See Table 3 for glazing layup description.

2 - See Table 4 for window geometry.

3 - Glazing provides MEDIUM LOP

4 - Level of Protection values overlap, only the highest LOP is shown.

5 - Standoff controlled by operable frame and meets MEDIUM LOP per paragraph 3-3.2.

6 - Standoff controlled by 12 mm airgap

7 - Analysis only considers the 6mm laminated inner pane due to software limitations

Table 9 – IGU Glazing Layup 5[1]

Window Number[2]	Level of Protection	Explosive Weight I		Explosive Weight II	
		Required Standoff (m)	Out-of-Plane Reaction (N/mm)	Required Standoff (m)	Out-of-Plane Reaction (N/mm)
1	Low	29[3]	6.5	15[3]	6.7
	Very Low	28	6.4	14	6.6
2	Low	28[3]	9.8	14[3]	9.8
	Very Low	-[4]	-[4]	-[4]	-[4]
3	Low	35[3,6]	7.1	15[3,6]	7.1
	Very Low	32[6]	7.3	-[4]	-[4]
4	Low	35[6]	7.1	15[3,6]	7.1
	Very Low	32[6]	7.3	-[4]	-[4]
5	Low	28[3,6]	12.5	12[3]	11.8
	Very Low	26[6]	13.1	11[6]	13.0
6	Low	35[3,6]	7.1	15[3,6]	7.1
	Very Low	32[6]	7.3	-[4]	-[4]
7	Low	37[6]	6.3	17[3,6]	6.3
	Very Low	34[6]	6.3	15[6]	6.3
8	Low	35[3,6]	6.7	16[3]	6.9
	Very Low	32[6]	7.0	14[6]	7.0
9	Low	33[3]	8.0	14[3]	7.9
	Very Low	31[6]	8.2	-[4]	-[4]
10	Low	36[3]	6.5	16[3,6]	6.1
	Very Low	32	6.6	14	6.6
11	Low	38	6.1	16	6.1
	Very Low	29[5]	5.2	13[5]	5.2
12	Low	38[6]	6.3	16[3]	6.3
	Very Low	29[5]	5.7	14	5.7
13	Low	28[3]	12.9	11	13.1
	Very Low	27	13.1	-[4]	-[4]
14	Low	28[3]	12.6	12[3]	12.2
	Very Low	26	13.1	11	13.1
15	Low	28[3,6]	12.6	12[3,6]	12.2
	Very Low	26[6]	13.1	11[6]	13.1
16-a	Low	35[3,6]	7.1	15[3,6]	7.1
	Very Low	33[6]	7.3	-[4]	-[4]
16-b	Low	35[3,6]	7.1	15[3,6]	7.1
	Very Low	34[6]	7.3	-[4]	-[4]
16-c	Low	35[3,6]	7.1	15[3,6]	7.1
	Very Low	34[6]	7.3	-[4]	-[4]

Table 9 – IGU Glazing Layup 5[1] (cont.)

Window Number[2]	Level of Protection	Explosive Weight I		Explosive Weight II	
		Required Standoff (m)	Out-of-Plane Reaction (N/mm)	Required Standoff (m)	Out-of-Plane Reaction (N/mm)
17-a	Low	29[5]	2.2	13[5]	2.2
	Very Low	-[4]	-[4]	-[4]	-[4]
17-b	Low	30[3,6]	8.8	15[3,6]	7.4
	Very Low	29[6]	8.8	14[6]	8.8
17-c	Low	35[3,6]	7.1	15[3,6]	7.1
	Very Low	33[6]	7.3	-[4]	-[4]
18-a	Low	37[6]	6.3	17[3,6]	6.3
	Very Low	35[6]	6.3	15[3,6]	6.3
18-b	Low	39[6]	6.1	18[6]	6.1
	Very Low	37[6]	6.1	16[6]	6.1
18-c	Low	41[3]	5.9	19[3]	5.9
	Very Low	38	6.0	17	6.0

1 - See Table 3 for glazing layup description.

2 - See Table 4 for window geometry.

3 - Glazing provides MEDIUM LOP

4 - Level of Protection values overlap, only the highest LOP is shown.

5 - Standoff controlled by operable frame and meets MEDIUM LOP per paragraph 3-3.2.

6 - Standoff controlled by 12 mm airgap

Table 10 – IGU Glazing Layup 6[1]

Window Number[2]	Level of Protection	Explosive Weight I		Explosive Weight II	
		Required Standoff (m)	Out-of-Plane Reaction (N/mm)	Required Standoff (m)	Out-of-Plane Reaction (N/mm)
1	Low	22[3]	12.3	12[3]	11.9
	Very Low	-[4]	- [4]	-[4]	- [4]
2	Low	22[3,6]	15.0	12[3,6]	14.1
	Very Low	21[6]	16.3	11[6]	16.3
3	Low	19[3,6]	24.1	10[3,6]	24.1
	Very Low	-[4]	- [4]	-[4]	- [4]
4	Low	24[3,6]	14.6	12[3,6]	14.3
	Very Low	-[4]	- [4]	11[6]	14.6
5	Low	19[3,6]	25.2	9[3]	23.3
	Very Low	-[4]	- [4]	-[4]	- [4]
6	Low	29[5]	2.8	13[5]	2.8
	Very Low	-[4]	- [4]	-[4]	- [4]
7	Low	29[5]	3.2	13[5]	3.2
	Very Low	-[4]	- [4]	-[4]	- [4]
8	Low	29[5]	3.6	13[5]	3.6
	Very Low	-[4]	- [4]	-[4]	- [4]
9	Low	29[5]	3.9	13[5]	3.9
	Very Low	-[4]	- [4]	-[4]	- [4]
10	Low	29[5]	4.6	13[5]	4.6
	Very Low	-[4]	- [4]	-[4]	- [4]
11	Low	29[5]	5.2	13[5]	5.2
	Very Low	-[4]	- [4]	-[4]	- [4]
12	Low	29[5]	5.7	13[5]	5.7
	Very Low	-[4]	- [4]	-[4]	- [4]
13	Low	19	26.1	9[3]	23.6
	Very Low	-[4]	- [4]	-[4]	- [4]
14	Low	21[3]	24.8	9[3]	24.4
	Very Low	20	26.1	-[4]	- [4]
15	Low	21[3,6]	25.7	9[3,6]	25.0
	Very Low	20[6]	26.1	-[4]	- [4]
16-a	Low	29[5]	2.4	13[5]	2.4
	Very Low	-[4]	- [4]	-[4]	- [4]
16-b	Low	29[5]	2.4	13[5]	2.4
	Very Low	-[4]	- [4]	-[4]	- [4]
16-c	Low	29[5]	2.4	13[5]	2.4
	Very Low	-[4]	- [4]	-[4]	- [4]

Table 10 – IGU Glazing Layup 6[1] (cont.)

Window Number[2]	Level of Protection	Explosive Weight I		Explosive Weight II	
		Required Standoff (m)	Out-of-Plane Reaction (N/mm)	Required Standoff (m)	Out-of-Plane Reaction (N/mm)
17-a	Low	29[5]	2.2	13[5]	2.2
	Very Low	-[4]	- [4]	-[4]	- [4]
17-b	Low	29[5]	2.3	13[5]	2.3
	Very Low	-[4]	- [4]	-[4]	- [4]
17-c	Low	29[5]	2.4	13[5]	2.4
	Very Low	-[4]	- [4]	-[4]	- [4]
18-a	Low	29[5]	2.2	13[5]	2.2
	Very Low	-[4]	- [4]	-[4]	- [4]
18-b	Low	29[3],[6]	11.8	14[3],[6]	11.8
	Very Low	-[4]	- [4]	-[4]	- [4]
18-c	Low	30[3]	11.7	15[3]	9.9
	Very Low	29[5]	2.4	14	12.1

1 - See Table 3 for glazing layup description.

2 - See Table 4 for window geometry.

3 - Glazing provides MEDIUM LOP

4 - Level of Protection values overlap, only the highest LOP is shown.

5 - Standoff controlled by operable frame and meets MEDIUM LOP per paragraph 3-3.2.

6 - Standoff controlled by 12 mm airgap

Table 11 – IGU Glazing Layup 7[1]

Window Number[2]	Level of Protection	Explosive Weight I		Explosive Weight II	
		Required Standoff (m)	Out-of-Plane Reaction (N/mm)	Required Standoff (m)	Out-of-Plane Reaction (N/mm)
1	Low	19[3]	17.7	10[3]	18.8
	Very Low	-[4]	-[4]	-[4]	-[4]
2	Low	18[3,6]	24.1	10[3,6]	22.4
	Very Low	-[4]	-[4]	-[4]	-[4]
3	Low	16[3,6]	36.7	8[3,6]	37.1
	Very Low	-[4]	-[4]	-[4]	-[4]
4	Low	21[3,6]	21.0	10[3,6]	20.7
	Very Low	20[6]	21.9	-[4]	-[4]
5	Low	16[3,6]	36.6	7[3]	38.9
	Very Low	-[4]	-[4]	-[4]	-[4]
6	Low	29[5]	2.8	13[5]	2.8
	Very Low	-[4]	-[4]	-[4]	-[4]
7	Low	29[5]	3.2	13[5]	3.2
	Very Low	-[4]	-[4]	-[4]	-[4]
8	Low	29[5]	3.6	13[5]	3.6
	Very Low	-[4]	-[4]	-[4]	-[4]
9	Low	29[5]	3.9	13[5]	3.9
	Very Low	-[4]	-[4]	-[4]	-[4]
10	Low	29[5]	4.6	13[5]	4.6
	Very Low	-[4]	-[4]	-[4]	-[4]
11	Low	29[5]	5.2	13[5]	5.2
	Very Low	-[4]	-[4]	-[4]	-[4]
12	Low	29[5]	5.7	13[5]	5.7
	Very Low	-[4]	-[4]	-[4]	-[4]
13	Low	16[3]	39.2	8[3]	33.4
	Very Low	-[4]	-[4]	7	38.9
14	Low	17[3]	39.2	8[3]	34.0
	Very Low	-[4]	-[4]	7	39.2
15	Low	18[3,6]	37.6	9[3,6]	30.4
	Very Low	17[6]	39.2	-[4]	-[4]
16-a	Low	29[5]	2.4	13[5]	2.4
	Very Low	-[4]	-[4]	-[4]	-[4]
16-b	Low	29[5]	2.4	13[5]	2.4
	Very Low	-[4]	-[4]	-[4]	-[4]
16-c	Low	29[5]	2.4	13[5]	2.4
	Very Low	-[4]	-[4]	-[4]	-[4]

Table 11 – IGU Glazing Layup 7[1] (cont.)

Window Number[2]	Level of Protection	Explosive Weight I		Explosive Weight II	
		Required Standoff (m)	Out-of-Plane Reaction (N/mm)	Required Standoff (m)	Out-of-Plane Reaction (N/mm)
17-a	Low	29[5]	2.16	13[5]	2.2
	Very Low	-[4]	-[4]	-[4]	-[4]
17-b	Low	29[5]	2.31	13[5]	2.3
	Very Low	-[4]	-[4]	-[4]	-[4]
17-c	Low	29[5]	2.43	13[5]	2.4
	Very Low	-[4]	-[4]	-[4]	-[4]
18-a	Low	29[5]	2.16	13[5]	2.2
	Very Low	-[4]	-[4]	-[4]	-[4]
18-b	Low	29[5]	2.31	13[5]	2.3
	Very Low	-[4]	-[4]	-[4]	-[4]
18-c	Low	29[5]	2.43	13[5]	2.4
	Very Low	-[4]	-[4]	-[4]	-[4]

1 - See Table 3 for glazing layup description.

2 - See Table 4 for window geometry.

3 - Glazing provides MEDIUM LOP

4 - Level of Protection values overlap, only the highest LOP is shown.

5 - Standoff controlled by operable frame and meets MEDIUM LOP per paragraph 3-3.2.

6 - Standoff controlled by 12 mm airgap

Table 12 – IGU Glazing Layup 8[1]

Window Number[2]	Level of Protection	Explosive Weight I		Explosive Weight II	
		Required Standoff (m)	Out-of-Plane Reaction (N/mm)	Required Standoff (m)	Out-of-Plane Reaction (N/mm)
1	Low	28[3]	7.8	14[3]	7.4
	Very Low	27	7.7	13	7.3
2	Low	28[3]	10.4	14	8.0
	Very Low	27	9.5	13[3]	10.4
3	Low	24[3]	12.8	12[3,6]	12.7
	Very Low	-[4]	-[4]	-[4]	-[4]
4	Low	34[3,6]	7.1	14[3]	7.6
	Very Low	31[6]	7.3	-[4]	-[4]
5	Low	27[3,6]	12.6	12[3,6]	12.6
	Very Low	26[6]	13.1	11	12.5
6	Low	34[3,6]	7.1	14[3]	7.6
	Very Low	31[6]	7.3	-[4]	-[4]
7	Low	37[3,6]	6.3	16[3,6]	6.2
	Very Low	33[6]	6.3	14[6]	6.3
8	Low	35[3,6]	7.0	16[3,6]	7.3
	Very Low	32[6]	7.3	14	6.9
9	Low	33[3]	7.8	15[3,6]	8.1
	Very Low	31[6]	8.2	13[5]	3.9
10	Low	35[3,6]	6.5	16[3,6]	6.1
	Very Low	32[6]	6.6	13[5]	4.6
11	Low	36[3,6]	6.1	16[3]	5.8
	Very Low	29[6]	6.1	13[5]	5.2
12	Low	36[3,6]	6.3	15	6.3
	Very Low	29[5]	5.7	13[5]	5.7
13	Low	28[3,6]	12.5	11[3,6]	12.6
	Very Low	27[6]	13.1	-[4]	-[4]
14	Low	27[3,6]	13.0	11[3,6]	12.9
	Very Low	26	13.1	-[4]	-[4]
15	Low	27[3,6]	12.5	11[3]	12.7
	Very Low	26[6]	13.1	-[4]	-[4]
16-a	Low	34[3,6]	7.1	14[3]	7.6
	Very Low	32[6]	7.3	-[4]	-[4]
16-b	Low	34[3,6]	7.1	15[3]	8.1
	Very Low	32[6]	7.3	14[3]	7.6
16-c	Low	34[3]	7.1	15[3,6]	8.1
	Very Low	33	7.3	14[3,6]	7.6

Table 12 – IGU Glazing Layup 8[1] (cont.)

Window Number[2]	Level of Protection	Explosive Weight I		Explosive Weight II	
		Required Standoff (m)	Out-of-Plane Reaction (N/mm)	Required Standoff (m)	Out-of-Plane Reaction (N/mm)
17-a	Low	29[5]	2.2	13[5]	2.2
	Very Low	-[4]	-[4]	-[4]	-[4]
17-b	Low	29[3,6]	8.6	14[3]	8.0
	Very Low	-[4]	-[4]	-[4]	-[4]
17-c	Low	34[3,6]	7.1	14[3]	7.6
	Very Low	32[6]	7.3	-[4]	-[4]
18-a	Low	37[3,6]	6.3	16[3]	6.2
	Very Low	35[6]	6.3	14[3]	6.3
18-b	Low	39[6]	6.1	17[3]	5.6
	Very Low	37[6]	6.1	16	6.1
18-c	Low	41[3]	6.0	17[3]	5.9
	Very Low	38	6.0	16	6.0

1 - See Table 3 for glazing layup description.

2 - See Table 4 for window geometry.

3 - Glazing provides MEDIUM LOP

4 - Level of Protection values overlap, only the highest LOP is shown.

5 - Standoff controlled by operable frame and meets MEDIUM LOP per paragraph 3-3.2.

6 - Standoff controlled by 12 mm airgap

Table 13 – IGU Glazing Layup 9[1]

Window Number[2]	Level of Protection	Explosive Weight I		Explosive Weight II	
		Required Standoff (m)	Out-of-Plane Reaction (N/mm)	Required Standoff (m)	Out-of-Plane Reaction (N/mm)
1	Low	21	12.2	12	10.6
	Very Low	-[4]	- [4]	11	12.6
2	Low	21[3]	15.7	11[3,6]	15.0
	Very Low	-[4]	- [4]	-[4]	- [4]
3	Low	18[3,6]	25.4	10[3,6]	22.8
	Very Low	-[4]	- [4]	-[4]	- [4]
4	Low	24[3,6]	13.4	12[3,6]	14.3
	Very Low	23[6]	14.6	-[4]	- [4]
5	Low	19[3,6]	25.5	9[3,6]	24.0
	Very Low	-[4]	- [4]	-[4]	- [4]
6	Low	29[5]	2.8	13[5]	2.8
	Very Low	-[4]	- [4]	-[4]	- [4]
7	Low	29[5]	3.2	13[5]	3.2
	Very Low	-[4]	- [4]	-[4]	- [4]
8	Low	29[5]	3.6	13[5]	3.6
	Very Low	-[4]	- [4]	-[4]	- [4]
9	Low	29[5]	3.9	13[5]	3.9
	Very Low	-[4]	- [4]	-[4]	- [4]
10	Low	29[5]	4.6	13[5]	4.6
	Very Low	-[4]	- [4]	-[4]	- [4]
11	Low	29[5]	5.2	13[5]	5.2
	Very Low	-[4]	- [4]	-[4]	- [4]
12	Low	29[5]	5.7	13[5]	5.7
	Very Low	-[4]	- [4]	-[4]	- [4]
13	Low	19[3]	24.6	8[3]	25.9
	Very Low	-[4]	- [4]	-[4]	- [4]
14	Low	20[3]	24.3	9[3]	23.0
	Very Low	19	26.1	8	26.1
15	Low	20[3,6]	25.7	9[3,6]	22.8
	Very Low	-[4]	- [4]	8[6]	26.1
16-a	Low	29[5]	2.4	13[5]	2.4
	Very Low	-[4]	- [4]	-[4]	- [4]
16-b	Low	29[5]	2.4	13[5]	2.4
	Very Low	-[4]	- [4]	-[4]	- [4]
16-c	Low	29[5]	2.4	13[5]	2.4
	Very Low	-[4]	- [4]	-[4]	- [4]

Table 13 – IGU Glazing Layup 9[1] (cont.)

Window Number[2]	Level of Protection	Explosive Weight I		Explosive Weight II	
		Required Standoff (m)	Out-of-Plane Reaction (N/mm)	Required Standoff (m)	Out-of-Plane Reaction (N/mm)
17-a	Low	29[5]	2.2	13[5]	2.2
	Very Low	-[4]	- [4]	-[4]	- [4]
17-b	Low	29[5]	2.3	13[5]	2.3
	Very Low	-[4]	- [4]	-[4]	- [4]
17-c	Low	29[5]	2.4	13[5]	2.4
	Very Low	-[4]	- [4]	-[4]	- [4]
18-a	Low	29[5]	2.2	13[5]	2.2
	Very Low	-[4]	- [4]	-[4]	- [4]
18-b	Low	29[5]	2.3	13[5]	2.3
	Very Low	-[4]	- [4]	-[4]	- [4]
18-c	Low	29[5]	2.4	14[3]	10.5
	Very Low	-[4]	- [4]	-[4]	- [4]

1 - See Table 3 for glazing layup description.

2 - See Table 4 for window geometry.

3 - Glazing provides MEDIUM LOP

4 - Level of Protection values overlap, only the highest LOP is shown.

5 - Standoff controlled by operable frame and meets MEDIUM LOP per paragraph 3-3.2.

6 - Standoff controlled by 12 mm airgap

APPENDIX A

WINDOW GEOMETRIES

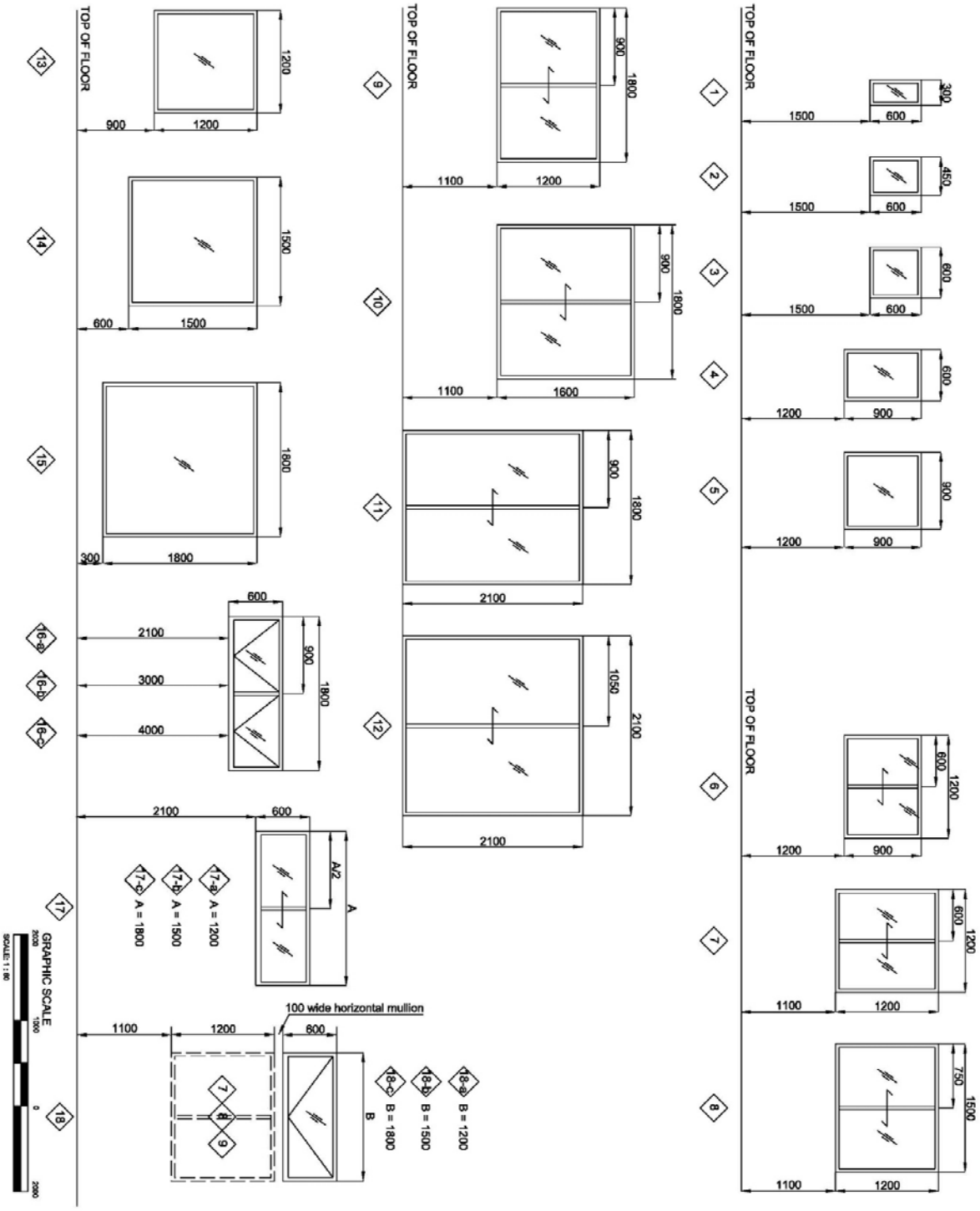

APPENDIX B

STANDOFF CALCULATION PROCEDURE FOR OPERABLE WINDOWS

Charge Weight I

$$SO = \left(\frac{STP}{233}\right)^{-.0893} \text{ for } 1 < STP < 4$$

Equation 1

$$SO = \left(\frac{STP}{327}\right)^{-.082} \text{ for } 4 < STP < 9$$

Equation 2

Charge Weight II

$$SO = \left(\frac{STP}{88.3}\right)^{-.0893} \text{ for } 1 < STP < 4$$

Equation 3

$$SO = \left(\frac{STP}{230}\right)^{-.069} \text{ for } 4 < STP < 9$$

Equation 4

Where:
STP = Structural Test Pressure (kPa)
SO = Standoff (m)

Out-of-Plane Load

$$Out - of - Plane\ Load = \frac{2 \times STP \times Area}{Perimeter}$$

Equation 5

Where:
STP = Structural Test Pressure (kPa)
Area = Rough Opening Area (mm^2)
Out-of-Plane Load = Connection Line Load along Frame (N/mm)
Perimeter = Rough Opening Perimeter (mm)

APPENDIX C

EXTERIOR DOOR STANDARDS

Vestibules (A)

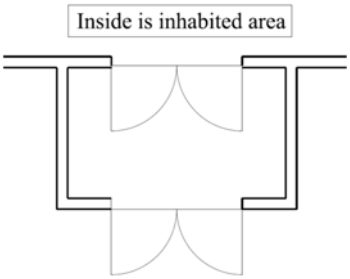

	Outer Door			Inner Door		
	Application	**Method**	**Criteria**	**Application**	**Method**	**Criteria**
1	Standard Door (Non-blast tested door)	n/a	n/a	Blast tested door	ASTM F2247 & ASTM F2927	UFC 4-010-01 B-3.3.1 & B-3.3.2
	Glazing	SBEDS-W or equivalent	UFC 4-010-01 Standard 10	Glazing	ASTM E1996 (Missiles A&D) ISO 16932 2007 (Missiles A & C)	UFC 4-010-01 Standard 10& B-3.3.4
2	Blast tested door	ASTM F2247 & ASTM F2927	UFC 4-010-01 B-3.3.1 & B-3.3.2	Standard Door (Non-blast tested door)	n/aGl	n/a
	Glazing	n/a	UFC 4-010-01 Standard 10	Glazing	SBEDS-W or equivalent	UFC 4-010-01 Standard 10
3	Analyzed door (Justified by SBEDS Ver5)	Where it is not possible to design intercepted door, designed to remain frame	UFC 4-010-01 B-3.3.3 Alternative design	Standard Door (Non-blast tested door)	n/a	n/a
	Glazing	Only small a vision glazing possible, 200mmx200mm	UFC 4-010-01 Standard 10	Glazing	SBEDS-W or equivalent	UFC 4-010-01 Standard 10

Vestibules (B)

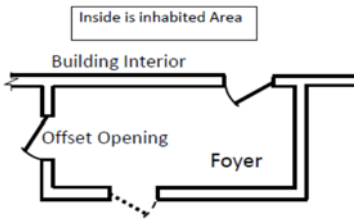

	Outer Door			Inner Door		
	Application	**Method**	**Criteria**	**Application**	**Method**	**Criteria**
1	Standard Door (Non-blast tested door)	Position door will not be propelled into inhabited areas	UFC 4-010-01 B-3.3.3 Alternative design	Standard Door (Non-blast tested door)	n/a	n/a
	Glazing	SBEDS-W or equivalent	UFC 4-010-01 Standard 10	Glazing	SBEDS-W or equivalent	UFC 4-010-01 Standard 10

Vestibules (C)

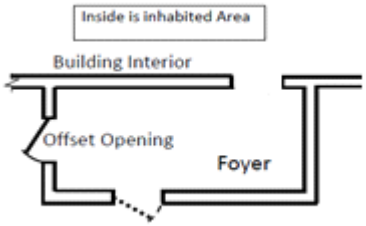

	Outer Door			Inner Door		
	Application	**Method**	**Criteria**	**Application**	**Method**	**Criteria**
1	Standard Door (Non-blast tested door)	Position door will not be propelled into inhabited areas	UFC 4-010-01 B-3.3.3 Alternative design	n/a	n/a	n/a
	Glazing	SBEDS-W or equivalent	UFC 4-010-01 Standard 10	n/a	n/a	n/a

U.S. Army Engineer Corps of Engineers
Protective Design Center
(Attn: CENWO-ED-S)
1616 Capitol Ave, Ste 9000
Omaha, NE 68102-4901

402 – 995 – 2366
PDC.Web@usace.army.mil

DISTRIBUTION STATEMENT A:
Approved for public release; distribution unlimited